Medical Lib.
APR 26 1930

Number 2

ysiological Zoölogy

APRIL, 1930

of Acids and Bases on the Respiration of Tapeworms
Sherburne F. Cook and Frances E. Sharman 145

of Soil Reaction on Earthworms
W. C. Allee, M. M. Torvik, J. P. Lahr, and P. L. Hollister 164

of the Origin and Differentiation of the Suprarenal Gland in the Embryo by Chorio-Allantoic Grafting - - *B. H. Willier* 201

ility of Optimum Motor Points Located on the Dorsal and Sides of the Spinal Cord of the Smooth Dogfish (*Galeus canis*) - - - - - - - - - - - *Attilio Zoccolo* 226

mental Study of Ovariectomy and Transplantation in the Preg- Rhino Rat - - - - *W. O. Nelson and H. O. Haterius* 231

Respiration and Glycolysis in Planaria. I. Methods and Certain Factors in Respiration - - - - - - *M. Fapps* 242

Consumption in the Developmental Stages of a Cladoceran
Vasil Obreshkove 271

THE UNIVERSITY OF CHICAGO PRESS
CHICAGO, ILLINOIS, U.S.A.

PHYSIOLOGICAL ZOÖLOGY

A Quarterly Journal of Zoölogical Research

CHARLES MANNING CHILD
Managing Editor

EDITORIAL BOARD

W. C. Allee, *University of Chicago*
M. F. Guyer, *University of Wisconsin*
L. V. Heilbrunn, *University of Pennsylvania*
E. E. Just, *Howard University*
F. R. Lillie, *University of Chicago*
R. S. Lillie, *University of Chicago*
W. W. Swingle, *Princeton University*
C. V. Taylor, *Stanford University*
J. H. Bodine, *University of Iowa*

Physiological Zoölogy is published quarterly by the University of Chicago at the University Press, 5750 Ellis Avenue, Chicago, Ill. The subscription price is $7.50 a year; the price of single copies is $2.00. Postage is prepaid by the publishers on all orders from the United States, Mexico, Cuba, Porto Rico, Panama Canal Zone, Republic of Panama, Dominican Republic, Canary Islands, El Salvador, Argentina, Bolivia, Brazil, Colombia, Chile, Costa Rica, Ecuador, Guatemala, Honduras, Nicaragua, Peru, Hayti, Uruguay, Paraguay, Hawaiian Islands, Philippine Islands, Guam, Samoan Islands, Balearic Islands, Spain, and Venezuela. Postage is charged extra as follows: for Canada and Newfoundland, 15 cents on annual subscriptions (total $7.65), on single copies 4 cents (total $2.04); for all other countries in the Postal Union, 25 cents on annual subscriptions (total $7.75), on single copies 6 cents (total $2.06). Patrons are requested to make all remittances payable to The University of Chicago Press in postal or express money orders or bank drafts.

The following are authorized agents:

For the British Empire, except North America, India, and Australasia: The Cambridge University Press, Fetter Lane, London, E.C. 4, England. Yearly subscriptions, including postage, 35*s.* 2*d.* each; single copies, including postage, 9*s.* 4*d.* each.

For Japan: The Maruzen Company Ltd., Tokyo.

For China: The Commercial Press, Ltd., Paoshan Road, Shanghai. Yearly subscriptions, $7.50; single copies, $2.00, or their equivalents in Chinese money. Postage extra on yearly subscriptions 25 cents, on single copies 6 cents.

Claims for missing numbers should be made within the month following the regular month of publication. The publishers expect to supply missing numbers free only when losses have been sustained in transit and when the reserve stock will permit.

Business correspondence should be addressed to The University of Chicago Press, Chicago, Ill.

Communications for the editors and manuscripts should be addressed to C. M. Child, Managing Editor of Physiological Zoölogy, The University of Chicago, Chicago, Ill.

The articles in this journal are indexed in the *International Index to Periodicals*, New York, N.Y.

Entered as second-class matter October 27, 1928, at the post-office at Chicago, Illinois, under the Act of March 3, 1879.

[PRINTED IN U.S.A.]

Physiological Zoölogy

Vol. III APRIL 1930 *No. 2*

THE EFFECT OF ACIDS AND BASES ON THE RESPIRATION OF TAPEWORMS

(Six figures)

SHERBURNE F. COOK AND FRANCES E. SHARMAN

Division of Physiology, Medical School, University of California, Berkeley, California

INTRODUCTION

ONE of the hypotheses that have been advanced to explain the fact that tapeworms and other intestinal parasites are not digested by the digestive enzymes of the intestines is the theory that they are not permeable to the enzymes.[1] Northrop (1926) concludes that pepsin and trypsin cannot enter the living cell. He injected trypsin into *Amoeba* and found that the inside of the *Amoeba* was digested but that the membrane remained untouched. He offers as a possible explanation for this phenomenon, the supposition, for which there is considerable evidence, that the surface of the cell is not protein and is therefore unaffected by protein digestants. Since very little is known of the permeability of tapeworms, a study involving the penetration of complicated substances such as enzymes would be too extensive. Therefore this work has been confined to a simpler aspect of their permeability—the penetration of hydrogen and hydroxyl ions.

Now it is logical to suppose that any effect of an acid or base on the worms may be reflected in their metabolism and that therefore an acid or basic solution may be considered to affect the respiration

[1] The principal alternative hypothesis postulates the existence of a definite anti-enzyme (Fetterolf, 1907; Hamill, 1906).

of the worms in direct proportion to their permeability to the hydrogen or hydroxyl ions. Therefore, in this investigation, the respiration of the worms has been used as a criterion of their condition under various treatments. The carbon-dioxide production is an indication of the total metabolism of the organism; an increased carbon-dioxide output may be considered to indicate increased metabolism; a decreased output, decreased metabolism; and a cessation of carbon-dioxide production, an indication of the death of the worms.

METHODS

As young lambs are almost never found without at least one tapeworm, this host was chosen as the source of the worms. *Moniezia trisonophora*, much the most prevalent species, was used for this work (see description in Hall, 1923).

The first problem was to discover a method by which the worms could be kept alive *in vitro*. A series of experiments showed that they were killed immediately by tap water, could live for 2 days in distilled water, were better adapted to mammalian saline, and could be kept for over a week in Ringer solution. The bicarbonate in the Ringer, however, would of course act to trap the carbon dioxide produced by the worms, and a solution of the following composition was therefore used:

NaCl	9 gm.
KCl	4.2 gm.
$CaCl_2$	2.4 gm.
H_2O	1,000 cc.

This solution was used in making up all of the acid and basic solutions into which the worms were put. A bottle was taken to the slaughter-house each time the worms were collected, and the worms were put directly from the gut into the Ringer solution.

It might be expected from the fact that these parasites live in an environment of such constant temperature that they would be very susceptible to even slight changes in temperature. Preparations had therefore been made to collect them in a thermos bottle and to take special care that their temperature be kept at exactly 37° C. Preliminary experiments proved, however, that such precautions were unnecessary. Although the metabolic rate and carbon-dioxide production is considerably lower at 20° than at 37°, the worms can

be kept at this lower temperature for 24 hours or more. When restored to their normal temperature, they resume their former rate of metabolism. In fact, the temperature can be lowered even to 5° C. without killing the worms; but any such extreme variation injures them, and their carbon-dioxide production is less when they are restored to 37° than it was before (see Table I).

The worms were, therefore, put into Ringer solution at the outside temperature, and brought directly to the laboratory, where they were kept in an incubator at 37° C. During the actual experiments they were kept in a water bath maintained at a constant tempera-

TABLE I

THE EFFECT OF TEMPERATURE ON THE RESPIRATION OF TAPEWORMS

(In each case the worms were kept at the lower temperature for 2 hours)

Experiment No.	Normal Rate of Respiration at 37° C. (Percentage)	Temperature Lowered to—	Rate of Respiration at Lower Temperature (Percentage)	Rate of Respiration after Temperature Restored to 37° C. (Percentage)
1	100	32°	82	100
2	100	27°	70	99
3	100	20°	55	101
4	100	17°	49	96
5	100	5°	11	54

ture, so that, with the exception of the 2 or 3 hours when the worms were being brought to the laboratory, they were kept at their accustomed temperature. There is no reason to suppose that this short period of time at a lower temperature had any injurious effect on the worms.

A few attempts were made to feed the worms with glucose. Since tapeworms feed by absorbing foodstuff through their outer coats, the obvious means of feeding them was to add a little glucose to the Ringer solution in which they were suspended. Such a solution, however, was very favorable to bacterial action and rendered this type of feeding impracticable. The worms were subjected to a number of washings in Ringer solution after removal from the glucose, but it was very difficult to free them from the bacteria, and the carbon-dioxide production was often greatly modified, hence the worms had to be kept without any external food supply. But it is

obvious that after removal from the host, the metabolism of the worms will decrease when their own store of food material begins to be depleted, and eventually starvation will result. The worms will, however, survive a considerable time—at least long enough for experiments on their respiration to be carried out. A survival curve of the worms in Ringer solution accompanies all the charts, so that the carbon-dioxide production by the worms in a controlled solution can be compared at any given time-interval with the normal carbon-dioxide production in Ringer solution.

Two methods were used to measure the carbon-dioxide production of the worms:

1. *The colorimetric method.*—The method used was a modification of the Osterhout-Haas method[1] for the detection of small amounts of carbon dioxide wherein an open system was substituted for the closed one used in the original work. By this method, the absolute carbon-dioxide production is not measured, but the time required to change a buffer solution of one pH to a slightly lower pH. This is determined colorimetrically—two standard solutions of definite hydrogen-ion concentration (in this case, pH 7.36 and pH 7.09) having been made up previously with borax and boric-acid buffers to which have been added a few drops of phenol red.

Air under pressure was first run through a very strong solution of sodium hydroxide to remove all the carbon dioxide. Four checks proved it to be absolutely carbon-dioxide-free. This carbon-dioxide-free air was then run into a liter flask containing the worms. The flask itself was contained in a water bath, and the temperature was kept at 37°. The air containing the carbon dioxide produced by the worms then passed through a two-way stopcock. It could pass through one set of tubes directly into the sodium-bicarbonate buffer solution, where the carbon dioxide it contained lowered the pH of the buffer and so changed its color from the red of the higher standard to the yellow of the lower; or it could pass through a U-tube containing solid sodium hydroxide, which would remove the carbon dioxide produced by the worms. Thus, when the air passed

[1] The principles of this method have been described in a series of papers entitled "Comparative Studies on Respiration," by Osterhout and others, in the *Journal of General Physiology* from 1918 to 1923. Cf. Osterhout (1918).

into the buffer solution, it would raise the pH, and so change its color from the yellow of the lower standard to the red of the higher. Hence, by turning the two-way stopcock, one could change the buffer from the red to the yellow, and vice versa. By means of a stop watch the time was determined for the carbon dioxide produced by the worms to change the buffer solution from one color to the other.

Of course the absolute amount of carbon dioxide produced by the worms was not known, and all the calculations had to be made on a comparative basis. The time it took for the worms in Ringer solution (24 hours after being removed from the animal) to produce enough CO_2 to change the sodium bicarbonate from the higher to the lower pH was in each case taken as the normal for the given lot of worms. The time required by these worms to produce the same amount of carbon dioxide in other solutions was then expressed as a percentage of this normal. Since a shorter time required to change the buffer from one color to the other represents a greater production of carbon dioxide, the reciprocal of the time had always to be taken in calculating the percentage. In the figures, this percentage was plotted as ordinate against the time that the worms had been in the given solution as abscissa.

The colorimetric method, of course, could be used only when the worms were in neutral Ringer and acid solutions. When they were put in alkaline solutions, the carbon dioxide would be trapped by the base and would not come over to lower the pH of the bicarbonate buffer. Another method, therefore, had to be employed for investigating the effect of alkali on the worms.

2. *The barium-hydroxide method.*—By this method, the actual amount of carbon dioxide produced by the worms was measured. As in the colorimetric method, however, the amounts of carbon dioxide were expressed as percentage of the normal in Ringer solution, so that all the curves are comparable no matter which method was used for getting the results.

Air under pressure was first passed through a strong solution of sodium hydroxide to remove all the atmospheric carbon dioxide. The carbon-dioxide-free air was then passed into the flask containing the worms. Most of the carbon dioxide produced by the worms in

the flask was trapped by the alkaline solution which contained them, but any that might escape was carried over into gas-washing bottles filled with barium hydroxide, where it was precipitated as barium carbonate. Three such bottles of barium hydroxide were used to prevent any escape of carbon dioxide, and the air was last passed into a solution of sodium bicarbonate with phenol red, so that the escape of any carbon dioxide could be detected immediately. Glass wool was wound around the delivery tubes to make the bubbles as small as possible and to insure contact of the carbon dioxide with the barium-hydroxide solution. After the worms had remained in the alkaline solution for half an hour, they were removed from the flask, and acid was introduced through a separatory funnel. The carbon dioxide which the worms had produced during the half-hour and which had been trapped by the alkaline solution was thus set free and, driven off by air which was run through the flask, was carried over into the barium hydroxide, where it was trapped. The barium hydroxide had previously been titrated against oxalic acid made up to such a strength that each cubic centimeter corresponded to exactly 0.1 milligram of carbon dioxide. By titrating again after the evolution of the carbon dioxide and subtracting the second reading from the first, and then deducting from this figure the amount of carbon dioxide contained in the alkaline solution as impurity, the exact amount of carbon dioxide produced by the worms over a period of half an hour could be calculated.

RESULTS

When tapeworms are put into either an acid or basic solution, unless the solution is strong enough to kill them, a typical response is obtained which varies, not qualitatively, but quantitatively when solutions of different hydrogen-ion concentration are used. The carbon-dioxide production is initially greatly increased—often to 200 per cent of the normal. This is followed by a corresponding decrease—often to as low as 50 per cent of the normal. From this point, the carbon-dioxide production more slowly increases to a new level, where it remains constant until the gradual starvation of the worms causes a slow falling-off in respiration. Figure 1 illustrates this typical reaction. In this case, worms were transferred from

Ringer solution to M/10,000 NaOH.[1] In 30 minutes after the introduction of the base, the respiration increased to 159 per cent of the normal in Ringer. Two hours later it had decreased to 70 per cent of the normal. Twenty-four hours after the introduction of the base, it had reached a new level at 104 per cent of the normal, where it

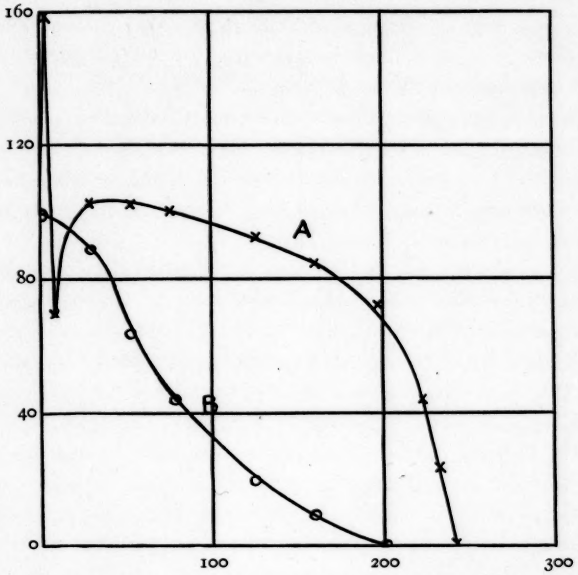

FIG. 1.—A typical response of tapeworms after the addition of an acid or a base. The points represent the level of respiration determined at the times indicated on the abscissae. Curve A shows worms in M/10,000 NaOH; curve B, worms in Ringer. The ordinates represent the percentage of the normal respiration in Ringer; the abscissae, time in hours.

remained for 48 hours and then gradually decreased, due to the starvation of the worms. For the sake of comparison, a survival curve of other worms in Ringer solution accompanies the curve of the worms in alkali.

Whenever worms are put from a solution of one hydrogen-ion

[1] It is understood that whenever a solution such as M/10,000 NaOH or HCl is mentioned, the acid or alkali is made up to the appropriate concentration in Ringer solution.

concentration into a solution of a different hydrogen-ion concentration, this typical response occurs regardless of whether the worms are being transferred into a solution of a higher or a lower pH. Apparently, any change in hydrogen-ion concentration acts as an immediate but brief stimulus to respiration. This is followed by a more prolonged inhibition of respiration, after which the worms gradually adapt themselves to the new medium and come to a new level of carbon-dioxide output, above or below the former level depending on whether the second solution is more or less favorable than the first (see Fig. 1). This entire sequence of events probably never occurs in the host, for the duodenal fluid is subject to such a constant shifting of hydrogen-ion concentration that the worms are never left in a solution of a definite pH long enough to come to the level for that concentration.

The typical response having been established, the next step was to determine whether it is the penetration of the hydrogen and hydroxyl ions or of other ions that cause the changes in the respiration of tapeworms. Numerous experiments in many physiological connections have shown the marked effect on living organisms of slight changes in salt concentration. To vary, then, the concentration of the sodium, calcium, and potassium ions of the Ringer solution would mean only the repetition of experiments which have been performed on other organisms. It may reasonably be assumed that slight changes in the concentration of these ions bring about the same sort of typical and mutually antagonistic effects as have been found with other organisms.[1] Therefore, attention was paid particularly to the effect of hydrogen and hydroxyl ions, together with some other anions, the same cation, sodium, being always used in the case of alkali.

A series of acids was selected for this study: hydrochloric, nitric, and sulphuric. Care was taken that the respective hydrogen-ion concentrations of the three acids should be approximately the same. The normal rate of respiration in Ringer solution was first taken for the three sets of worms. Each set of worms was then put into the appropriate acid diluted to a hydrogen-ion concentration equivalent

[1] The relationship between ion antagonism and respiration has been discussed by Osterhout (1919), Brooks (1919), and Gustafson (1919).

to that in M/10,000 HCl. When the carbon-dioxide production had reached a new permanent level, the hydrogen-ion concentration was altered to that corresponding to M/1,000 HCl. This procedure was

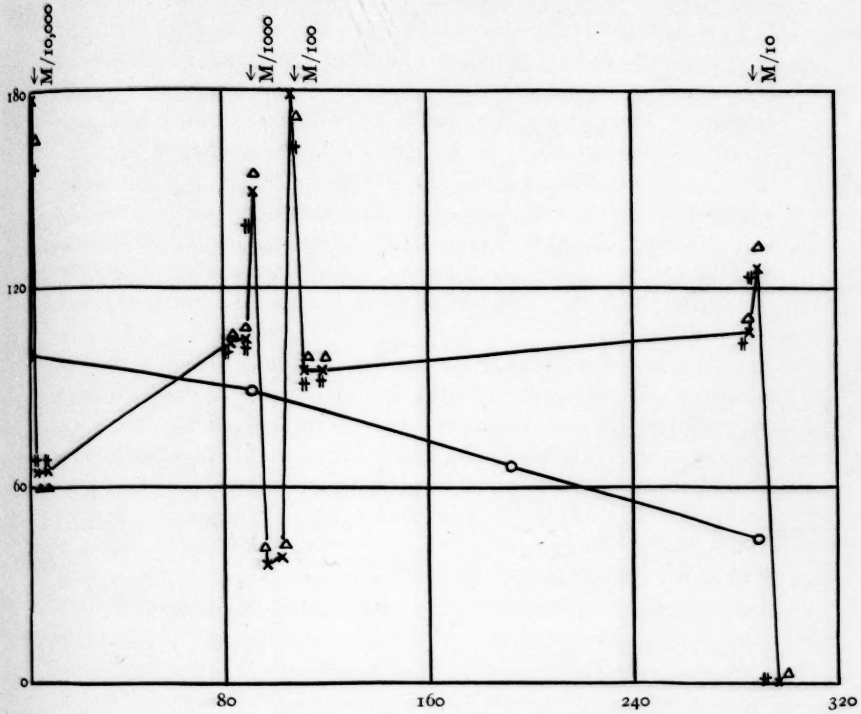

FIG. 2.—The action of various concentrations of HCl, HNO_3, and H_2SO_4. The time of introduction of each concentration is indicated by arrows at the top of the graph. The single crosses represent HCl, the triangles H_2SO_4, and the double crosses HNO_3. Only the points representing HCl are connected. The circles show a control set of worms in Ringer. See text. The co-ordinates are as in Fig. 1.

repeated until a pH equivalent to M/10 HCl was reached. The striking similarity of the action of the worms in the three *different* solutions of the *same* hydrogen-ion concentration will be seen by an examination of Figure 2. Since the slight divergencies of the other two curves from the hydrochloric-acid curve are within the limits of

experiment error, the evidence seems to be quite strong that the changes in respiration of the worms in the case of acids are caused by the hydrogen ion rather than the anion. Hydrochloric acid is the only acid with which these worms are accustomed to come in contact in their natural environment, and one might easily suppose that they would be affected by the anions of other acids; but the results of the foregoing experiments indicate that this supposition is ungrounded. Thus, acids differ from bases in the case of which a change of cation would probably be of significance. Nevertheless, with respect to any one base, e.g., sodium hydroxide, we are safe in assuming that as far as effects due to pH change are concerned, the hydroxyl ion is the active agent. The influence of the sodium may be disregarded, particularly in view of the fact that this ion is already present in the Ringer solution in much greater concentration than in the added base.

There seems to be a marked difference in the effect of either an acid or a base, depending on whether the worms are put directly into a solution of definite concentration or are stepped up through a series of more dilute solutions. The worms are able to adapt themselves to a considerable range of pH if the change is brought about gradually, but a sudden change from a given hydrogen-ion concentration to a much greater or a much less one kills the worms in a short time. Tables II and III summarize the data concerning this point. Figure 3 shows the effect of various concentrations of NaOH when worms were placed directly in these solutions, and Figure 4 illustrates the same effect with HCl. A comparison of Figure 2 with Figure 4 for HCl, and Figure 3 with Figure 5 for NaOH, as well as an inspection of the data presented in Tables II and III, will demonstrate the adaptability of the worms to high concentrations of either acid or alkali when they have been previously subjected to lower concentrations. The adaptation data given in the tables are from a separate series of experiments not illustrated in the figures.

M/10 hydrochloric acid and sodium hydroxide always kill the worms immediately, regardless of whether they are put directly into the solution of that strength or are stepped up through more dilute solutions.

A comparison of Tables II and III will also bring out the fact

that the worms survive for a longer period of time and at a higher level in a given molar concentration of sodium hydroxide than in the corresponding concentration of hydrochloric acid. This holds true

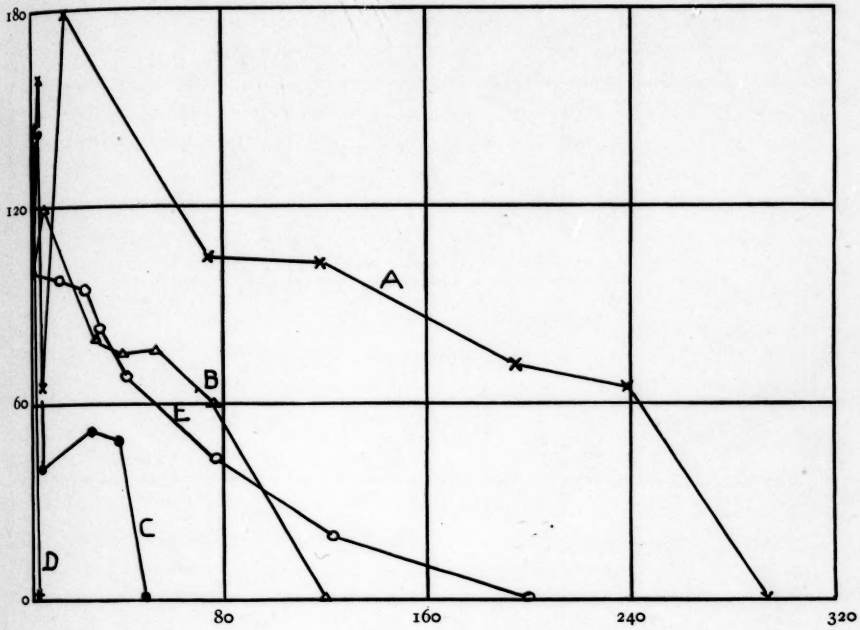

FIG. 3.—The effect of various concentrations of NaOH when worms were put directly into these from Ringer.

Curve A = M/10,000 NaOH
Curve B = M/1,000 NaOH
Curve C = M/100 NaOH
Curve D = M/10 NaOH
Curve E = Ringer

The co-ordinates are the same as Fig. 1.

of the concentrated as well as the more dilute solutions. These results are to be expected from the fact that the accustomed environment of the worms is akaline and is probably rendered acidic only momentarily.

On the basis of these experiments, the optimum hydrogen-ion

concentration is that corresponding to M/10,000 sodium hydroxide, and the other solutions may be arranged in the manner illustrated in Table IV.

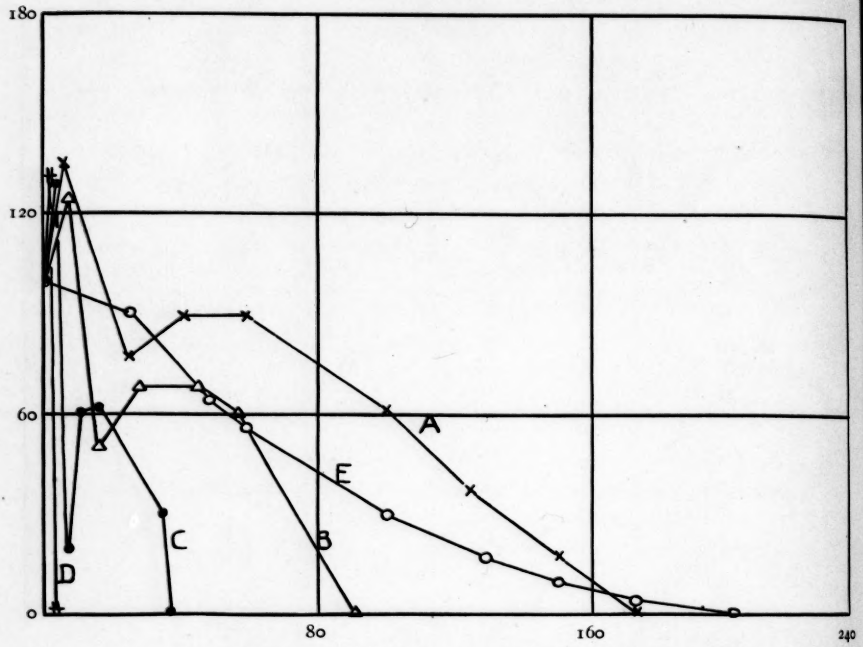

FIG. 4.—The effect of various concentrations of HCl when worms were introduced directly from Ringer.

Curve A = M/10,000 HCl
Curve B = M/1,000 HCl
Curve C = M/100 HCl
Curve D = M/10 HCl
Curve E = Ringer

The co-ordinates are the same as Fig. 1.

It is reasonable that the worms should be best fitted to live in a solution of M/10,000 NaOH because of the fact that this solution has a hydrogen-ion concentration approximately equal to that of the intestinal fluid. It is also reasonable that they should live for long periods of time in Ringer solution, M/10,000 HCl, and M/1,000

NaOH because they are probably forced to adapt themselves frequently to varying hydrogen-ion concentrations within this range. It is found that the worms living in sheep prefer the duodenum and

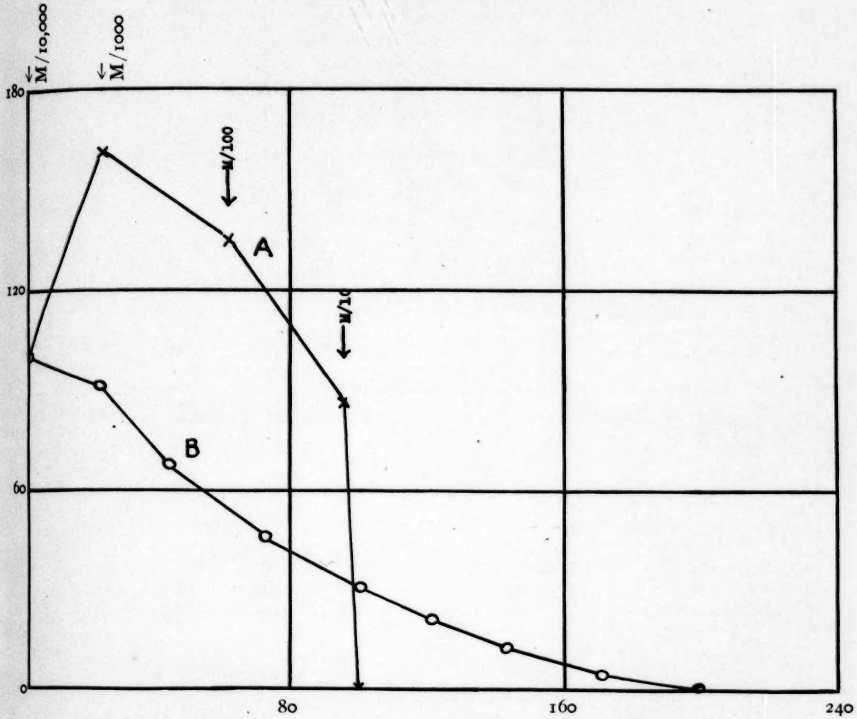

FIG. 5.—The effect of gradually increasing the concentration of NaOH. The arrows indicate the points at which the appropriate concentrations of NaOH were added. The level of respiration as shown by the points was obtained immediately prior to changing the concentration.

Curve A = NaOH
Curve B = controls in Ringer

The co-ordinates are the same as Fig. 1.

anterior part of the intestine. The smaller worms are usually found here and sometimes even in the pancreatic duct; and, although the longer worms often extend for a considerable distance caudad to the duodenum, their heads are found almost without exception at-

tached to its walls. Lying in this region of the intestine, and subject, as they are, to acid baths by the chyme from the stomach on the

TABLE II*

THE EFFECT OF HYDROCHLORIC ACID ON THE RESPIRATION OF TAPEWORMS

(The survival time is reckoned from the first introduction of the solution specified)

	M/10,000 HCl		M/1,000 HCl		M/100 HCl	
	Survival Time (Hours)	Percentage of Normal Respiration	Survival Time (Hours)	Percentage of Normal Respiration	Survival Time (Hours)	Percentage of Normal Respiration
Worms put directly into solutions	170	105	90	70	36	62
Worms after being stepped up through more dilute solutions, i.e., the preceding ones	.....	.....	150	103	76	100

* The percentage of normal respiration given in this table is the maximum permanent rate when the worms have come to equilibrium; that is, after the *second* rise in rate which follows the initial temporary rise and fall (see text and Fig. 1). There is, of course, always a subsequent falling-off due to the gradual starvation of the worms.

TABLE III*

THE EFFECT OF SODIUM HYDROXIDE ON THE RESPIRATION OF TAPEWORMS

(The survival time is reckoned from the first introduction of the solution specified)

	M/10,000 NaOH		M/1,000 NaOH		M/100 NaOH	
	Survival Time (Hours)	Percentage of Normal Respiration	Survival Time (Hours)	Percentage of Normal Respiration	Survival Time (Hours)	Percentage of Normal Respiration
Worms put directly into solutions	286	160	120	75	44	50
Worms after being stepped up through more dilute solutions, i.e., the preceding ones	.....	.....	205	140	125	97

* The percentage of normal respiration given in this table is the maximum permanent rate when the worms have come to equilibrium; that is, after the *second* rise in rate which follows the initial temporary rise and fall (see text and Fig. 1). There is, of course, always a subsequent falling-off due to the gradual starvation of the worms.

one hand and basic baths by the bile and pancreatic juice on the other, the worms must be capable of rapid adaptation to an environment of quite varying hydrogen-ion concentration. They must be

able to withstand a continual shifting of the medium from acid to base, and vice versa; and it is probable that the pH range of this shift in their natural environment is no greater than that represented by the range from M/1,000 NaOH to M/10,000 HCl.

A further series of experiments showed that the tapeworms are able not only to adapt but to readapt themselves within this range (see Table V). In these experiments the worms were transferred from dilute acid to dilute alkali, and vice versa. It was found that they could withstand any of these changes. There is furthermore no

TABLE IV*

CONCENTRATIONS OF ACID AND ALKALI ARRANGED IN THE ORDER OF THEIR EFFECTIVENESS IN SUSTAINING THE LIFE OF TAPEWORMS

Medium	Hours Surviving	Percentage of Normal Respiration
M/10,000 NaOH	286	180
Ringer	200	100
M/10,000 HCl	175	90
M/1,000 NaOH	120	75
M/1,000 HCl	90	70
M/100 NaOH	44	50
M/100 HCl	36	60
M/10 NaOH	0	0
M/10 HCl	0	0

* The percentage of normal respiration given in this table is the maximum permanent rate when the worms have come to equilibrium; that is, after the *second* rise in rate which follows the initial temporary rise and fall (see text and Fig. 1). There is, of course, always a subsequent falling-off due to the gradual starvation of the worms.

reason to suppose that they are restricted to one or two such changes. Undoubtedly they could be shifted back and forth indefinitely *in vitro* without harmful effects, just as they are probably shifted under natural conditions.

The data in Table V indicate that the worms can a little more easily adapt themselves from a lower to a higher pH than conversely. This might be expected, since, in going from a solution of a lower pH to one of a higher, they are more likely to be approaching their optimum.

It may also be emphasized here that the worms respond to a change from an acid to a base, or vice versa, in precisely the same manner in which they respond to a shift from neutrality (i.e., Ringer) to acid or base, or from one concentration of acid or base to another

concentration of the same. In other words, the essential change is one of pH. This may be taken as further evidence that it is an alteration of the hydrogen- and hydroxyl-ion concentration only which causes the observed changes in the respiratory rate of the worms.

These experiments were purposely restricted to the range between M/10,000 HCl and M/1,000 NaOH. A sudden introduction of the worms from neutrality (Ringer) into a solution with a hydrogen-ion concentration beyond these limits kills them in a short

TABLE V

CHANGES IN HYDROGEN-ION CONCENTRATIONS WITHIN THE NON-TOXIC RANGE

From	To	Hours Survived
Changes from Lower to Higher pH		
Ringer, 48 hours	M/1,000 NaOH	238
M/10,000 HCl, 24 hours	Ringer	190
M/10,000 HCl, 24 hours	M/10,000 NaOH	111
Changes from Higher to Lower pH		
M/10,000 NaOH, 24 hours	Ringer	120
Ringer, 48 hours	M/10,000 HCl	77
M/10,000 NaOH, 24 hours	M/10,000 HCl	61

time. But, as has been mentioned, worms may be trained to live in solutions of quite high hydrogen- or hydroxyl-ion concentration by a gradual increase of acidity or alkalinity (see Table II and III). That these extreme concentrations, however, are really toxic to the worms and that the parasites are really injured by them is shown by the fact that when high concentrations are reached, if the *direction* of the change is altered the worms are unable to readapt themselves and are soon killed. There is a striking contrast with those cases (see above, and in Table V) where the solutions do not vary widely from neutrality, and where the worms may readapt themselves indefinitely. For instance, a set of worms were able to survive well when taken from Ringer to M/10,000 NaOH, to M/1,000 NaOH, to M/100 NaOH. But if in this progression, after becoming adapted to M/100 NaOH, worms were replaced in M/1,000 NaOH, they

died within an hour, regardless of the fact that they were able to live well in that solution only 24 hours previously (see Fig. 6). Similarly, a set of worms was carried from Ringer to M/10,000 HCl, to M/1,000 HCl, to M/100 HCl. But another set of worms, having been placed in M/1,000 HCl, instead of being stepped up further into

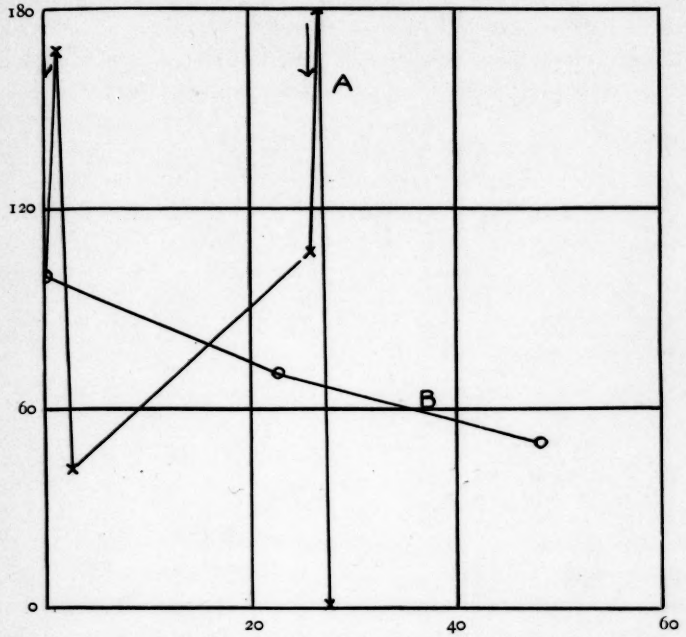

FIG. 6.—The effect of reversing the direction of concentration change. The first arrow at the top of the graph shows the point at which a set of worms was changed from M/1,000 NaOH to M/100 NaOH. The second arrow designates the point at which they were put back into M/1,000 NaOH. Curve A = NaOH; Curve B = control in Ringer. The co-ordinates are the same as Fig. 1.

M/100 HCl, were replaced in M/10,000 HCl. They died immediately. Evidently the M/100 NaOH and M/1,000 HCl had an injurious effect on the worms, *which was made evident* by the inability of the worms to readapt themselves.

We may consequently mark off a definite range of pH (represented by the extremes M/1,000 NaOH and M/10,000 HCl) within

which tapeworms are able to live without injury, and which approximately coincide with their natural, varying milieu. Beyond these limits the tapeworms may live for a certain length of time when artificially adapted thereto. Nevertheless, the conditions are abnormal, and the worms are injured. Within the non-toxic range the worms react *reversibly* to changes of pH. Outside this range they react (or adapt themselves) *irreversibly*.

The facts here presented indicate that tapeworms possess a mechanism which enables them to adapt themselves to an environment of constantly changing hydrogen-ion concentration. During the process the metabolic rate of the worms varies with the pH, and the assumption is reasonable that in order to alter the respiration the hydrogen and hydroxyl ions actually penetrate the worms. If this is so, then we have at least one instance where the tapeworm does not rely on an impermeable membrane as a defense mechanism against unfavorable chemical surroundings. Whatever may be the situation with respect to large molecules such as those of trypsin, as far as simple inorganic ions such as hydrogen and hydroxyl are concerned, the tapeworm appears to possess complete permeability.

SUMMARY

Whenever tapeworms are changed from a solution of one hydrogen concentration to one of a different concentration, a typical response is observed. The carbon-dioxide production is initially greatly increased; this is followed by a marked decrease which lasts for a period of about 2 hours. The worms then return to a new level of carbon-dioxide production, which is higher or lower than their level in the first solution according as the new solution is more or less favorable than the first. The worms maintain this new level of carbon-dioxide production until starvation causes a gradual falling-off of respiration.

Since different acids of same pH have the same effect on the respiration of tapeworms, the hydrogen ion is probably the effective agent. In the case of sodium hydroxide, it is reasonable to suppose that the effect is due to the hydroxyl ion.

There is a definite range of hydrogen-ion concentration (M/1,000 NaOH—M/10,000 HCl) which is non-toxic to tapeworms, with the

optimum at approximately M/10,000 NaOH. If the worms are put directly into solutions with a pH outside of this range, e.g., M/100 NaOH and M/100 HCl, the worms are killed in a relatively short time. The worms can be trained to live in solutions outside of this range, however, with the exception of extreme concentrations such as M/10 HCl or M/10 NaOH, if they are stepped up through more dilute solutions. Even though they are able to live in these more concentrated solutions, they are injured by them, a fact which is brought out by their inability to readapt themselves to more dilute solutions. Within the non-toxic range, they can undergo a change from a lower to a higher pH more readily than from a higher to a lower.

LITERATURE CITED

BROOKS, M. M. 1919. Comparative studies on respiration. VIII. The respiration of *Bacillus subtilis* in relation to antagonism. Jour. Gen. Physiol., II, 5.

FETTEROLF, D. W. 1907. The existence of an anti-enzyme in tapeworm. Univ. Penn. Med. Bull., XX, 94.

GUSTAFSON, F. G. 1919. Comparative studies on respiration. IX. The effects of antagonistic salts on the respiration of *Aspergillus niger*. Jour. Gen. Physiol., II, 17.

HALL, M. C. 1923. Parasites and parasitic diseases of sheep. U.S. Dept. Agr., Farmers Bull., No. 1330.

HAMILL, J. M. 1906. On the mechanism of protection of intestinal worms and its bearing on the relation of enterokinase to trypsin. Jour. Physiol., XXXIII, 476.

NORTHROP, J. H. 1926. The resistence of living organisms to digestion by pepsin and trypsin. Jour. Gen. Physiol., IX, 497.

OSTERHOUT, W. J. V. 1918. A method of studying respiration. *Ibid.*, I, 17.

———. 1919. Comparative studies on respiration. VII. Respiration and antagonism. *Ibid.*, II, 1.

INFLUENCE OF SOIL REACTION ON EARTHWORMS[1]

(Three figures)

W. C. ALLEE, M. M. TORVIK, J. P. LAHR, AND P. L. HOLLISTER
Whitman Laboratory of Experimental Zoölogy, University of Chicago

INTRODUCTION

MANY recent studies have indicated a positive relation between the H-ion concentration of the soil and the germination, growth, and distribution of plants. Some of the outstanding contributions are noted in our literature list. Kurz (1923), in a careful survey of the Chicago region, found the correlation to be less close than is usually pictured. Similar studies of the distribution and physiology of marine and fresh-water animals have shown a correlation with the pH of the medium. Others have pointed out various limitations that should be recognized before interpreting observed differences in animals as being causally related to differences in the pH of the environment. (See "Literature Cited.")

There has been much less work on the relation of the pH of the soil and the distribution or life-processes of land animals. Atkins and Lebour (1923) found that, with certain unexplained irregularities, British land snails show a species and an individual distribution correlated with soil pH.

Hurwitz (1910), using the dung worm *Helodrilus (Bimastus) foetidus*,[2] concluded that this species is sensitive to certain changes in H-ion concentration. Parker and Metcalf (1907) had previously noted that the same species is distinctly sensitive to various chemical agents, viz., distilled water alone, chlorides of various monobasic metals, and ammonia in weak solution. The degree of sensitivity, moreover, differed for the different metals. Shohl (1914), using monobasic hydroxides on the same species, concluded that the observed differences in reaction were due to the hydroxyl-ion content of the solutions used.

[1] We are indebted to Dr. L. H. Hyman for assistance in identification of earthworms, and to Dr. M. W. Senstius for aid in soil analyses.

[2] The classification of the Lumbricidae here used is based on Smith (1917) who uses the classification of Michaelsen (1900 and 1910).

Arrhenius (1921) reported the results of laboratory tests of 5 days' duration on the earthworm *Pheretima* (*Perichaeta*) *indica* Horst from Java, and of 3.5 days' on *Lumbricus terrestris* from California. These tests were made in pot cultures with controlled pH values from pH 3.0 to 10.0, regulated in the first instance by adding solutions of H_2SO_4 or KOH, and in the second case by adding H_2SO_4 or NaOH. From these tests he concluded that earthworms can live in slightly acid or in neutral soils only, so that the reported absence of earthworms in Egypt is the result of the low H-ion concentration, since "nearly all good Egyptian soils have a pH above 7.5." Arrhenius further concludes that "the presence or absence of earthworms in the soil is dependent on its reaction and that this also determines the soil type."

Moore (1922), in connection with investigations on a different problem, found vigorous earthworms in soil of pH 5.5 on Mount Desert Island, Maine. Phillips (1923), while examining soil samples near Woods Hole, Massachusetts, found earthworms in considerable numbers in soils of pH 6.0. Very few worms were found in soils of pH 5.0 or 5.2, and none were taken from the more acid soils that were examined.

Salisbury (1923) showed that earthworms cause a considerable change in the H-ion concentration of acid soils, in some instances amounting to as much as 0.75, though more usually the change amounted to about 0.3 or 0.4 of a pH unit. Similarly, earthworms tend to reduce the alkalinity of alkaline soils. Salisbury considers the correlation between earthworm distribution and the H-ion concentration of the soil to be quite close; in fact, he states that this appears to be a "master reaction" in determining the distribution of earthworms. He recognizes that other important elements in the situation are the moisture content and the amount of organic matter in soils.

Salisbury estimates the distribution of the Lumbricidae in England, regardless of species, to be as follows:

pH	Earthworms per Acre	pH	Earthworms per Acre
5.7	484	7.0	45,012
6.2	15,484	7.2	696,960
6.4	170,386	7.4	91,960

He regards the observations which gave the low estimates for neutral soils in this series to be atypical, since he regularly found the greatest numbers of worms in circumneutral soils. In observations made at another time, he records finding 700,000 per acre in a locality with very nearly neutral reaction, which had a moderately high water content and a high organic content. He cites the observations of Brett (1883), who estimated that more than 800,000 earthworms might be found in the upper 3 feet of an acre of good garden soil under similar conditions.

J. F. V. Phillips (1924) had occasion to make incidental observations on earthworms in different soil types in South Africa. He estimates at 10,000 per acre the number of earthworms in the upper foot of "heavy" acid soils. Lighter soils of more moderate acidity support as many as 40,000 worms per acre in the upper 12 inches.

Wherry (1924) reports finding, in soil of high acidity (surface, pH 4.7; pH 4.9 at a depth of 5 cm.), an earthworm which appeared quite normal. This specimen was preserved and identified as *Helodrilus* (*E.*) *lonnbergi* (Michaelsen), a comparatively rare species with unusually large calciferous glands.

Steagall (1925) repeated the experiments of Arrhenius, using four different species of earthworms in pot cultures at different H-ion concentrations, and reports results indicating a higher alkaline tolerance than was found by Arrhenius. Her work formed the first part of the series of studies which are summarized in the present paper, but her data have not been used in compiling the summarizing tables of this report.

Smith (1928), after miscellaneous observations covering a period of about 30 years in one part of Illinois, concludes that introduced European species are gradually displacing native species in this region. No soil reaction tests were reported, but soil changes are indicated by the fact that portions of the soil under most careful observation had become highly contaminated with sewage. Two or three species appear to tolerate such contamination, while other species seem to be affected more adversely.

Olson (1928), also stimulated by the report of Arrhenius, collected soils from different parts of Ohio, which in nature showed H-ion concentration ranging from pH 4.5 to 8.4. Distilled water was

added to bring the soils to a proper moisture content, and they were then placed in pyrex beakers to preserve the normal pH as nearly as possible. *Lumbricus terrestris* were introduced and found to be living after an exposure of 4 weeks in soils ranging from pH 4.5 to 8.4. Later, in making collections of earthworms in Ohio, *L. terrestris* was taken from soils ranging from pH 5.45 to 8.6; *Helodrilus caliginosus trapezoides*, from pH 5.4 to 8.7, with more worms collected at 8.0 than at any other level of H-ion concentration; *H. tetradrus* ranged from pH 6.8 to 8.5; *Diplocardia* from 5.5 to 8.6. Soils were also collected in which no worms were found. In one case the pH was 4.25. This was a shale soil with almost no organic content and with unfavorable water supply and soil type. In another case all worms were absent in muck with a pH of 5.4, with high moisture as well as high organic content.

From his observations in Ohio, Olsen concludes that earthworms are more abundant in soils of about pH 8.0 than in circumneutral soils, as indicated by the work of Arrhenius and of Salisbury. He notes the different requirements of different species of worms, and regards pH, moisture, organic content, and soil type as all being important in earthworm distribution.

This brief survey of the literature shows a lack of harmony of opinion as to the importance of the H-ion concentration as a factor in determining earthworm activity and distribution. Since soil reaction is one of many soil factors which may be acting, which lends itself particularly well to quantitative measuring, more comprehensive data seem desirable on this point. In attacking such a problem, two main lines have been followed, viz., laboratory experiment and field observations. The laboratory experiments are of two general types: (1) Survival experiments, designed to discover the ability of earthworms to survive in soils having widely different pH. (2) Reaction experiments to ascertain whether or not there is a tendency for worms to select any one H-ion concentration when given the opportunity of moving into different concentrations. The field observations were designed to check laboratory experience.

Steagall (1925) began the work in this laboratory. Her experiments were limited to survival tests of 25 days' exposure or less. Miss Steagall used four species of worms in pot cultures with the pH

controlled by the alkalies KOH or NaOH and by sulphuric, hydrochloric, or tannic acids. Torvik (1926) repeated and extended these experiments, using a different species; and Hollister in 1929 again checked over this ground. Field work was done chiefly by Lahr. Torvik ran preliminary reaction experiments, but most of this work has been done by Hollister. Allee proposed the problem, has had oversight of both field and laboratory, and has supplied the continuity; he is responsible for the final form of this report.

METHODS

Resistance experiments.—Ten experimental and two control pots were used for each series. Clean unglazed flower pots holding about 1,350 cc. of earth were selected. After each had received its quota of good garden soil, pot 1 was treated with 100 ml. of approximately N/1 hydroxide solution; pot 2 with 100 ml. of approximately N/2 of the same alkaline reagent; pot 3 received N/10; and pot 4, N/100 solution of the same alkali. Pots 5 and 6 were treated with 100 ml. of tap and of distilled water, respectively, and were considered to be the controls for the series. Pot 7 received 100 ml. of approximately N/100 acid; pot 8, the same amount of N/20 acid; pot 9, N/10; pot 10, N/5; pot 11, N/2; while pot 12, the last in the series, was treated with 100 ml. of approximately normal acid of the sort used throughout the series. Such treatments were repeated at intervals of a few days until the proper gradations in H-ion concentration of the soils became relatively stable. Careful attention is necessary at this point because of the buffer action of soil.

Each pot was placed within a glass aquarium covered by a glass plate to preserve moisture and prevent escape of the worms. Five worms, dug within the preceding 48 hours but allowed to stand for approximately 24 hours to allow detection of injuries in digging, were placed in each pot when the reaction of the soil was under control. Further details concerning the standard technique used are given by Steagall (1925).

The bottom of each aquarium was kept moist by adding very small amounts of the appropriate solution of acid or alkali from time to time. At scheduled intervals the worms were removed from each pot and examined for general condition of the living worms. At these

times the condition of the soils was carefully noted; and if the soil reaction had changed appreciably, some of the appropriate stock solution was added before the worms were returned. This system of observation was maintained through 12 days in the earlier work; and in the later studies, as long as 109 days.

In making the pH tests of the soil, soil samples were collected from the region in which the earthworms were found. The soils were extracted with distilled water; centrifuged, if necessary; and tested colorimetrically, using, generally, Wherry's (1922) modified method, although refinements which have appeared since that date were incorporated. The quinhydrone electrode was not used. The indicators and standards used were secured from reputable firms, and readings were doubly or triply checked whenever the occasion seemed to demand this precaution.

Other environmental factors not previously mentioned were these: Light was excluded, since the work was done in an experimental dark room. The extreme temperature range in the room in the 1928 work was from 18° to 30° C.; but for more than 90 per cent of the time the air temperature varied less than 6°. The high temperature may well have served as a limiting factor, increasing the death-rate at unfavorable pH levels in certain cases. The soil temperatures were not checked, but these should be less than that of the air outside the inclosing aquaria. The original habitat and control soils were slightly alkaline in all series, as is shown in the data concerning the controls. Certain physical properties of the soil, such as porosity, friability, and the like, are not so easily measured; and no specific control methods were devised. It was generally observed, however, that careful control of moisture content tended to keep the soil in what appeared to be good physical condition, except that with certain reagents there appeared to be a specific soil effect.

Reaction experiments.—Preliminary tests in which worms were placed in soils of widely different H-ion concentration in boxes designed to give maximum intercommunication for the worms, with the minimum pH interchange between the tested soils, were discontinued when it was found that more diagrammatic results could be obtained by using saturated filter papers, thereby avoiding complications due to the buffer action of the soils.

For these filter-paper experiments, metal boxes 30 cm. square and 10 cm. deep were used. The boxes were coated inside with paraffin. The bottom was marked off into four equal areas, each of which was covered by a double layer of filter paper which could be saturated with an acid or alkali solution of the desired strength, or with water for control experiments. Since the precise saturation point is difficult to determine, the practice was to add a definite amount (10 ml.) of the acid, alkali, or water to each square of filter paper.

When an experimental and a control box had been prepared, both were covered to prevent evaporation, and were set aside for 30 minutes to allow uniform conditions to become established. Eight to twelve medium-sized worms were then introduced into each box in such a way that the anterior end of each worm rested on one filter-paper square while the posterior end rested on another. With this arrangement it was possible for each worm to respond to two sets of papers without crawling more than an inch or so. Each box was now covered to screen out stray light, and the experiment was allowed to stand for an hour before readings were made. At the end of this reaction period the position of each worm was noted; and after their removal each filter paper was extracted with 25 ml. of distilled water, which was then tested for H-ion concentration.

In this series of experiments it was found that rapid initial changes in pH ceased after about 30 minutes, at the time when the worms were introduced. A change in the H-ion concentration of from 0.4 to 0.8 might be expected during the experimental period. Thigmotropic reactions were reduced to a minimum by carefully sealing down the edges of the filter paper with the moistening solution and by introducing few enough worms to minimize the danger of chance meetings and of clumping. Temperature stood between 21° and 25° C. for all but the final series, in which the range was from 25.5° to 29° C. The work was done in an experimental dark room. Worms were introduced and counted under a desk lamp placed directly over the center of the pans. Foreign buffers such as dirt and slime were largely eliminated by washing the worms for about 1 minute in water and then allowing them to crawl for another minute over absorbent paper.

Soil reaction and earthworm distribution.—Detailed observations

and analyses were made on soils of four stations near Chicago through spring and summer months. The species and number of earthworms and the depth at which each was found in a soil plot 1 × 5 feet, dug to water table at a depth of 2–4 feet, were recorded. The reaction of each stratum of soil was determined according to methods previously cited. The percentage of moisture and hygroscopic moisture was determined at least once for each plot. The soluble ash, soluble humus, and organic matter present were also determined. A mechanical analysis of each soil was made according to the U.S. Bureau of Soils standard. Total moisture content was determined by drying in an oven at 100° C. until constant weight was attained. Hygroscopic moisture was tested by exposing a weighed sample of dry soil to air and re-weighing. Less-detailed observations were made in seventeen other localities in northern Illinois, in fifteen rather widely scattered regions in Indiana, and at one station in northern Kentucky. In these less-detailed studies, in addition to finding the soil reaction and the number and species of earthworms, the soil type, the amount of organic matter, and the condition of the soil were estimated, and a record made of the more prominent species of nearby plants. The stations selected for such sampling were chosen in order to secure observations on as many soil habitats as possible. They were not true chance samplings and were not intended to be such.

FIELD INVESTIGATIONS

In the intensive study of four habitats near Chicago a large mass of data on both physical and chemical soil factors has been accumulated. Presentation of the full, detailed data would be editorially objectionable, though otherwise desirable. They are deposited in the library of the University of Chicago (Lahr, 1929). The essential features in a very condensed form are given in Table I.

The depth of the first stratum varied from 7.5 to 19 inches in the different habitats. Except in one instance, no worms were taken during the spring and summer months below the first stratum; they were most commonly found in the upper 4 inches of soil. In these stations, the pH of soils containing earthworms varied from 5.8 to 7.3. The absence of worms from the Palos Park muck was not necessarily due to the soil reaction, because, as will be shown later, the worms could

live in this soil in the laboratory, and worms were taken from more acid soils elsewhere.

Although more worms per unit area were taken from the sand-soil near Wolf Lake than from any other of these four habitats, later studies showed that this was probably due to other advantageous conditions rather than to soil type. The outstanding features of this soil are: a good supply of organic matter in the upper 8 inches; sandy

TABLE I

DISTRIBUTION OF EARTHWORMS WITH REFERENCE TO IMPORTANCE OF SOIL FACTORS

Station	Total No. of Worms Found in 15 Sq. Ft. of Soil	pH Range (Three tests between 6/13/26 and 3/20/27)	Soil Type	Percentage of Water—Field Conditions—Average of Two or Three Summer Months	Weight Loss (Percentage) on Ignition*	Soluble Humus (Percentage) Exclusive of Ash	Soluble ash (Percentage)
(1)	(2)	(3)	(4)	(5)	(6)	(7)	(8)
Wolf Lake, first stratum.....	261	6.8–7.3	Sand	33.91	15.23	7.50	0.31
Riverside, first stratum.....	159	7.0–7.3	Sandy loam	24.90	10.48	0.64	5.17
Clearing, Illinois, first stratum...	90	6.8–7.0	Sandy loam; almost loam	31.47	14.39	6.49	0.615
Palos Park, first stratum.....	1	5.8–5.9	Muck	41.92	25.51	13.07	2.63

* Weight loss on ignition is here taken as the best available measure of the total organic content of the soil.

texture, allowing plenty of aëration; abundant and constant supply of water, and a pH of 7.0–7.3. The upper 8 inches of this soil was found to contain worms at the rate of 836, 352 per acre, on the basis of the largest number found in any one collection.

Worms were generally found to be most plentiful in soils of medium texture. Data on organic matter in relation to earthworm abundance shows that worms are most plentiful in the Chicago region in soils that lose from 10.48 to 15.23 per cent on ignition. They were absent from Palos Park muck soil that loses from 25 to 41 per cent. The soluble-humus factor does not seem to be closely correlat-

ed with earthworm abundance except when present in excess, as in the Palos Park muck.

In these four localities the ranking of the species as to relative abundance, beginning with the most abundant, was: *Helodrilus* (*Allolobophora*) *caliginosus trapezoides* Mich., *Lumbricus rubellus* Hoff., and *L. terrestris* Linn.

Miscellaneous field observations.—These miscellaneous observations consisted of a selection of a larger number of soil habitats representing wide variations of soil reactions, a study of which might throw light upon two questions: the range of pH toleration for earthworms in general, and the range of pH toleration of various species of earthworms.

These studies show that earthworms tolerate a pH range of at least 5.6–8.3. The soil which tested pH 5.6 was only 2 or 3 inches deep; the second stratum tested pH 5.2. Undoubtedly burrows of the worms extend into the lower soil, and they probably inhabit the second stratum in periods of drought or freezing. Olson found earthworms in Ohio soils from pH 5.4 to 8.7. Hydrogen-ion concentration was probably not the limiting factor in muck soil testing pH 5.2. Another soil classified as muck, testing pH 5.8, was devoid of earthworms (see No. 6, Table II). Although they were common in other soils of that pH, some factors other than pH seemed to prevent earthworms from occupying the muck of these two stations. Worms were found in abundance in soil testing as low as pH 5.8 (No. 4) and as high as pH 7.8 (No. 28).

Most of the Palos Park muck soil tested between pH 5.2 and pH 5.8. In over 50 per cent of the examinations of this muck, digging up areas of one to several square feet, no worms were found. In one field no worms were found in the dozens of tests made during 1926. One worm was found in the spring of 1927 in this location. In observation of a nearby field of muck which was being plowed, it seemed that in areas of higher organic content there were no worms but that worms were present where the organic content was lower.

In peat near Chapman's Lake which tested pH 7.3, no worms were present. It seems that in the more-organic muck and peat examined there were one or more factors other than pH which inhibited the existence of earthworms.

An analysis of Table II shows that the only soil type in which no worms were found was peat. In some mucks there were no worms; in others, few; and in one, a medium number of worms. In clay soil worms were either few or in medium abundance. In the one silt soil examined the worms were fairly abundant. Most of the various loam soils had many worms, less had a medium number, still less had a few, and only one loam had no worms. Sand soils ranged from no worms to many. These data indicate that no soils except peat—and to some extent, muck—limit the distribution of earthworms. The other soil types seem to govern the abundance of earthworms but do not limit their existence. Worms were found in great abundance in soils of medium texture or in a mixture of medium-fine to medium-coarse soils. The value of these data is very much limited by the fact that soil types were determined in nearly all cases by appearance and also by the limited numbers of each type of soil examined.

As to organic matter, no worms were found in soils having over 50 per cent organic matter. Between 30 per cent and 50 per cent of organic matter seemed to limit the numbers present, if not to inhibit their existence. Generally speaking, there were few worms in very light-colored soils. Worms were most abundant in soils of medium to much organic matter, but of less organic content than muck. Worms were more often found in pervious and friable soils than in more impervious soils.

The fact that three species, *Helodrilus foetidus*, *H. caliginosus trapezoides*, and *Lumbricus terrestris* were each found in abundance in the greenhouse soil shows that in this soil were to be found nearly the optimum of some of the important environmental factors for the existence of each of these species. It at least proves that the ranges of the limiting factors for each of these three species overlap at the points where they existed in this soil. For instance, it proves that even though *Helodrilus foetidus* and *Lumbricus terrestris* may have different pH ranges, they overlap at the pH of this soil, which is 7.6. This greenhouse soil is sandy loam containing a high percentage of organic matter; it is moist and very friable.

The most common habitat of *Helodrilus foetidus* was found to be manure. This species was not found in soils more acid than pH 7.0 in nature; but in an experiment with various species in pots of muck

TABLE II

MISCELLANEOUS OBSERVATIONS ON THE PRESENCE OF VARIOUS SPECIES OF EARTHWORMS IN RELATION TO SOIL FACTORS

(Data by Lahr)

Location and Date	Species and pH Relative Abundance	pH	Soil Type	Amount of Organic Matter	Condition of Soil	Crop
1. Palos Park, Ill., 5/26	None	5.2	Muck	Very much	Dry impervious	Grasses
2. Palos Park, Ill., 6/15/26	*Helodrilus caliginosus trapezoides* (few)	First stratum, 5.6 Second stratum, 5.2	Clay	Little	Medium-dry impervious	Blue grass
3. Palos Park, Ill., 7/31/26	*H. caliginosus trapezoides* (few)	5.8	Clay	Little	Dry impervious	Blue grass
4. Palos Park, Ill., 5/26	*H. caliginosus trapezoides* (44 in 8 sq. ft.)	5.8	Silt, loam	Medium	Medium-moist, medium-friability	Timothy; blue grass
5. Palos Park, Ill., 5/26	*H. caliginosus trapezoides* (common)	5.8	Muck	Much	Moist, medium-pervious	Grasses
6. Palos Park, Ill., 5/23/26	None	5.8	Muck	Very much	Medium-dry, medium-friable	Timothy; blue grass
7. Riverside Park, Indianapolis, Ind., 7/12/28	None	5.9	Sand	Medium–little	Moist-friable	Under clump pine trees
8. Madison, Ind., 5/14/26	*H. caliginosus trapezoides* (common)	6.0	Clay	Little	Moist, pervious	Red sorrel
9. Spring Mill Road, 63d St., Indianapolis, 10/16/27	*Octolasium lacteum; H. roseus* (few)	6.2	Clay, loam	Medium	Moist, pervious	Corn Stubble
10. Milton, Ky., 6/14/27	*O. lacteum* (few)	6.5	Clay	Little	Dry, impervious	Blue grass
11. Fairview, Indianapolis, 10/16/27	*Lumbricus terrestris* *O. lacteum* (common)	6.5	Silt	Medium	Moist	Herbs trees
12. South Park, 88th St., Chicago, 8/6/26	*H. caliginosus trapezoides* (common)	6.6	Sand	Medium	Medium-dry, medium-pervious	Blue grass, sweet clover
13. Plainfield, Ind., 10/21/27	*O. lacteum*	6.7	Silt	Medium–much	Moist, medium-pervious	Soy beans
14. Riverside, Ill., 7/30/26	*H. roseus* (common)	7.0	Sandy loam	Medium–little	(Stony) medium-dry, impervious	Blue grass
15. 96th St., University Ave., Chicago, 8/6/26	*H. caliginosus trapezoides* (common)	7.0	Silt, loam	Medium	Medium moisture, medium friability	Recently cultivated
16. Riverside, Ill., 5/23/26	3 *L. rubellus* 6 *H. caliginosus?* (common)	7.0	Sandy loam	Medium–little	(Stony) Medium-dry, impervious	Blue grass

TABLE II—*Continued*

Location and Date	Species and pH Relative Abundance	pH	Soil Type	Amount of Organic Matter	Condition of Soil	Crop
17. Mascatatuk Park, North Vernon, Ind., 5/14/27	Probably *H. roseus* (common)	7.0	Clay	Little	Impervious, moist	Red sorrel, moss, grass
18. Bridgeport, Ind., 10/21/27	Probably *H. foetidus* *O. lacteum*	7.0	Clay, loam	Medium	Moist-dry, impervious	Blue grass
19. Wolf Lake, Ind., 5/23/26	*H. caliginosus trapezoides* (many)	7.0	Sandy	Medium–much	Moist, friable	Blue grass
20. Clearing, Ill., 5/22/26	*H. caliginosus trapezoides* (many)	7.0	Sandy loam	Medium–much	Medium-dry, pervious	Blue grass sweet clover
21. Chapman's Lake, Warsaw, Ind., 7/4/26	None	7.3	Peat underlayed with marl	Very much	Wet marsh	Many herbs
22. Riverside, Ill., 5/23/26	*H. caliginosus trapezoides* *L. terrestris* (many)	7.3	Sandy loam	Medium–little	Medium-dry, impervious	Grass
23. Mooresville, Ind., 6/26/26	*O. lacteum* (few)	7.3	Muck, marl	Muck	Wet, boggy	Blue grass, weeds
24. 57th St., Ingleside Ave., Whitman Laboratory, Chicago, 5/22/26	*H. caliginosus trapezoides* (Medium)	7.4	Sand	Medium	Medium-moisture, medium-pervious	Weeds
25. Stony Island, 94th St., Chicago, 8/6/26	*H. caliginosus trapezoides* (many)	7.6	Silt	Medium–much	Moist, medium friability, uncultivated	Blue grass, leguminous herbs and weeds
26. Near Botany Greenhouse, 58th St., Ellis Ave., Chicago, 5/22/26	*H. foetidus* *L. terrestris* *H. caliginosus trapezoides* (all abundant)	7.6	Sandy loam	Much	Moist, friable	Loose pile of soil
27. Mooresville, Ind., 10/21/27	*O. lacteum* (few)	7.8	Muck, marl, sandy	Much	Wet, boggy	Blue grass, weeds
28. Stony Island, 94th St., Chicago, 8/6/26	*H. caliginosus trapezoides* (few)	7.8	Fine sandy loam	Medium	Stony, medium friability	Sweet clover
29. Cottage Grove, 67th St., Chicago, 8/6/26	*H. caliginosus trapezoides* (few)	8.0	Sand	Little	Stony, dry-impervious	Blue grass, sweet clover
30. Ben Davis, Ind., 10/21/27	*L. rubellus?* (few)	8.0	Fine sand, silt	Medium	Moist	Alfalfa nodules abundant
31. Bridgeport, Ind., 10/21/27	*L. rubellus*	8.2	Clay-loam	Medium	Moist, impervious	Under old manure pile
32. Mooresville, Ind., 10/21/27	*H. roseus* (common)	8.3	Sand	Little	Moist, medium pervious	Grasses
33. Bridgeport, Ind., 10/21/27	*H. foetidus* (many)	?	Old manure	Very much	Moist	None

testing pH 5.4, all five worms of this species survived throughout the experiment and were in medium condition at the end of 29 days.

Briefly, the data show that in nature our common species of earthworms tolerate a wide range of pH, soil types, conditions and percentages of organic matter. These observations are summarized in Figure 1 and are given together with Olsen's data in Table III.

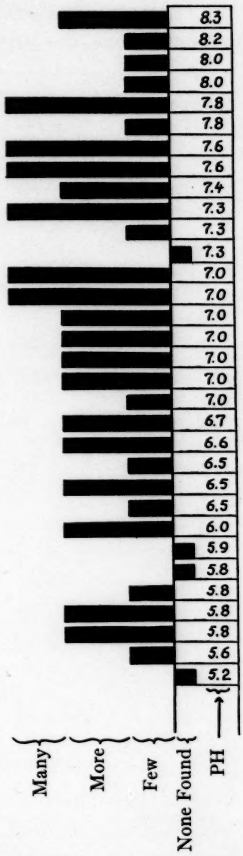

FIG. 1.—Showing relative numbers of earthworms present in nature in soils at different pH levels.

LABORATORY SURVIVAL TESTS[1]

a) *Treated soils.*—A summary of the longest survival experiment which was attempted is given in Table IV. The survivals are more erratic than in the shorter experiments, which ran for 50, 31, 38, 31, 24, 50, and 40 days, respectively. The fact that these worms were taken during the active breeding season may have affected their susceptibility. Nomura and Ohfuchi (1928) report changes in earthworm reactions to light at different seasons of the year.

As explained above (p. 168), pots 5 and 6 are controls treated with tap and with distilled water, respectively. Pots 1–4 are in the alkaline range, established by treatment with KOH, while the other pots had their reaction established by treatment with tannic acid. Column 2 gives the observed pH range during the experiment, with the mean of all observations shown in column 3. In the columns shown in column 4, the first worm to die is recorded as No. 1; the last to die, or those living throughout the 109 days of the test, are shown in the last columns. Column 5 shows the mean life in days, with the percentage of possible survival given in column 6. The last two columns summarize the condition of the worms and the soil at the end of the experiment.

Table IV is given in part to illustrate the basic data at hand and in part on its own account. Examination shows that perfect survival records were made by one group in alkaline soil (pH 7.3–8.0; mean, 7.86); by the distilled-water control worms (pH 7.3–7.8; mean 7.47); and by one acid-treated series (pH 6.5–7.5, mean 7.06). Two other alkali series, including that tested under most extreme conditions,

TABLE III

THE RELATION BETWEEN SPECIES OF EARTHWORMS AND PH

SPECIES	ORDER OF FREQUENCY	PH AT WHICH WORMS SURVIVED 20 DAYS IN EXPERIMENTAL CONDITIONS	PH RANGE OF SOILS IN WHICH WORMS WERE FOUND IN NATURE		
			Lowest	Highest	No. of Stations
H. caliginosus trapezoides	1	5.4	5.6† 5.45*	8. 8.7*	19 80*
O. lacteum	2	.....	6.2	7.8	7
L. terrestris	3	5.4‡	6.5 5.45*	7.6 8.6*	4 27*
H. foetidus	4	5.4	7.0	7.6	3
H. roseus	4	.....	6.2	8.3	3
L. rubellus	5	.....	6.8	8.0	2
**H. tetraedrus*	.....	.....	6.8*	8.5*	11*
**Diplocardia*	.....	.....	5.5*	8.6*	13*

* Data from Olson.

† Lahr's data indicate that this worm may enter soil of pH 5.2.

‡ Olson (1928) kept this species for 4 weeks in natural soils varying from pH 4.5 to 8.4.

and one other acid lot showed a survival above that of the tap-water control. The numbers are too small for details to be given much weight, but this is a good indication of some of the possibilities inherent in this type of experimentation, which are shown to be quite different from those obtained from the similar, though much more brief, experiment of Arrhenius (1921). A shorter experiment which demonstrates the possibility of striking resistance to a wide range of H-ion concentration is given in full in Table V. This table is arranged exactly as was the preceding one.

The percentage of survival of *Helodrilus caliginosus trapezoides*,

the most common earthworm of the Chicago region, when in pot cultures of soils at different pH levels, is summarized in Figure 2. The different pH groupings are shown at the left, while the length of the solid blocks gives the percentage of survival calculated in

TABLE IV

SHOWING THE SURVIVAL OF *Helodrilus caliginosus trapezoides* IN A POTASSIUM-HYDROXIDE–TANNIC-ACID SERIES RUNNING FROM APRIL 30 TO JULY 28, 1926

(Experiment by Torvik)

Pot No.	pH		Life in Days per Worm (4)					Mean Life in—		Condition at End of Experiment of—	
	Range	Mean	1	2	3	4	5	Days	Per Cent	Worms*	Soil
(1)	(2)	(3)						(5)	(6)	(7)	(8)
1	8.0–8.5	8.44	28	73	73	109	109	78	72	.....	Puddled
2	8.0–8.5	8.28	28	45	45	45	45	42	38	.....	Puddled
3	7.3–8.0	7.86	109 days throughout					109	100	5 Kt.	Puddled
4	7.3–7.9	7.59	18	45	45	109	109	65	60	2 M.	Slightly puddled
5	7.4–7.8	7.56	18	34	45	109	109	63	58	2 M.	Slightly puddled
6	7.3–7.8	7.47	109 days throughout					109	100	5 M.	Medium
7	7.0–7.6	7.34	31	52	59	59	59	42	38	.....	Medium
8	6.5–7.5	7.06	109 days throughout					109	100	2 M.; 2 Kt.	Medium
9	6.5–7.4	6.73	52	109	109	109	109	98	90	4 G.	Good
10	6.3–7.3	6.60	5	10	10	10	59	19	17	.....	Medium
11	6.0–6.8	6.44	5	10	21	109	109	51	47	2 M.	Granular
12	6.0–6.5	6.15	5	15	45	45	109	44	40	1 M.	Granular

* Kt. = knotted; M. = medium; G. = good.

terms of possible earthworm days during an exposure of 30 days. The number of worms used is shown by the figures in each block. The alkaline soils were obtained by treatment with KOH, NaOH, and $Ca(OH)_2$; circumneutral and acid soils by treatment with HCl, H_2SO_4, HNO_3, acetic, formic, tannic, and citric acids. More experiments were run with $Ca(OH)_2$ and H_2SO_4 than with the other reagents.

Disregarding for the moment the effect of the different types of

chemicals, we find that the recorded differences are not significant over the pH range from about 6.9 to 8.3, but that on both sides of this plateau there is a sharp falling-off in survival. In Lahr's study of natural soils he found this species common to abundant from pH 5.8 to 7.8, and Olson reports its occurrence from pH 5.45 to 8.7.

TABLE V

SHOWING THE SURVIVAL OF *Helodrilus caliginosus trapezoides* IN A CALCIUM-HYDROXIDE–SULPHURIC-ACID SERIES RUNNING FROM JUNE 8 TO JULY 29, 1926

(Experiment by Torvik)

Pot. No.	pH		Life in Days per Worm					Mean Life in—		Condition at End of Experiment of—	
	Range	Mean	1	2	3	4	5	Days	Per Cent	Worms	Soil
1.....	8.0–8.2	8.06	27	41	50	50	50	44	88	1 P., 2 Kt.*	G.–M.†
2.....	7.7–7.9	7.82	50	50	50	50	50	50	100	4 M., 1 Kt.	M.
3.....	7.5–7.8	7.62	50	50	50	50	50	50	100	1 M., 4 Kt.	M.–P.
4.....	7.5–7.6	7.54	50	50	50	50	50	50	100	3 M., 2 Kt.	M.–P.
5.....	7.3–7.5	7.4	50	50	50	50	50	50	100	4 G., 1 M.	G.
6.....	7.4–7.5	7.4	50	50	50	50	50	50	100	5 G.	G.
7.....	6.8–7.3	7.0	13	50	50	50	50	43	86	.	M.–P.
8.....	6.4–6.8	6.6	50	50	50	50	50	50	100	., 3 Kt.	M.
9.....	6.0–6.6	6.34	27	50	50	50	5[illegible]	45	90	4 M., 2 Kt.	M.–P.
10.....	5.8–6.4	6.2	50	50	50	50	50	50	100	5 Kt.	M.–P.
11.....	5.6–6.0	5.8	20	34	50	50	50	41	82	1 P., 2 Kt.	M.
12.....	5.4–5.8	5.6	13	20	20	27	34	23	46	.....	M.

* Kt. = knotted; M. = medium; G = good.

† G. = good; M. = medium; P. = puddled.

When one turns to find whether or not pH is the soil factor acting in these laboratory experiments with soils treated with different reagents (Fig. 3), it is easy to see that certain reagents are less favorable than others, even at the same pH level. Of the alkalies, NH_4OH is distinctly unfavorable; the evidence from the acid-treated soils clearly indicates that H_2SO_4 is the most favorable of those tried and that HCl is distinctly unfavorable.

It must be remembered that in treating the soil with these reagents, changes were made in the soil in addition to the change in its reaction. Those noted include a change in the physical condition and in the soil salts. The production of different salts must have an effect upon the exposed animals. Joffe (1920) ascribes the good ef-

fect, upon the growth of alfalfa, produced by the addition of H_2SO_4 to the soil to the sulphates formed. Likewise, Salter and McIlvaine (1920) found that treatment with citric acid favored bacterial growths which produced rapid changes in the nitrate content. Hydrochloric acid introduced into calcareous soils forms chlorides, among them calcium chloride, which is soluble and physiologically active, while the corresponding salt with sulphuric acid is only slightly soluble. This, in part at least, accounts for the poor results obtained with soils treated with HCl.

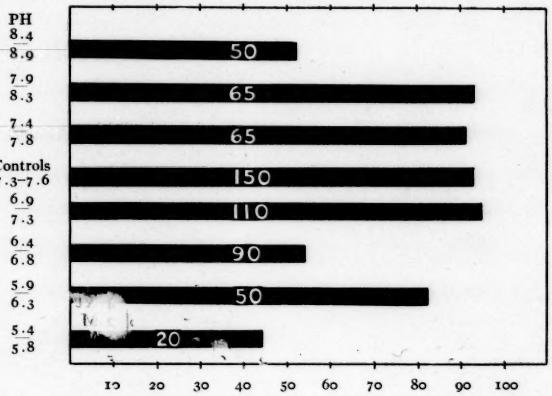

FIG. 2.—Showing the resistance of *Helodrilus caliginosus trapezoides* at different pH levels. For explanation see p. 179.

Physical changes noted included the tendency of soils treated with KOH or with HCl to become sticky or puddled. Citric- and sulphuric-acid treated soils showed some tendency in the same direction but were decidedly less affected and more nearly approached the control soils in texture. Soils treated with nitric or tannic acids, or with sodium, or, particularly, with calcium hydroxide, kept their loamy, crumbly condition; and acetic acid and ammonium hydroxide were nearly as favorable in this respect. The soil treated with tannic acid took on and retained an extremely granular texture, especially in the pots treated with a high concentration of this acid. Such changes in the physical condition must affect the aëration of the soil, if no other condition, and so affect earthworm survival.

b) *Survival in muck.*—In 1926 Torvik and Lahr collaborated in testing the ability of three species of worms to live in muck in which no worms were found in nature (Palos Park soil, Table I). Five each

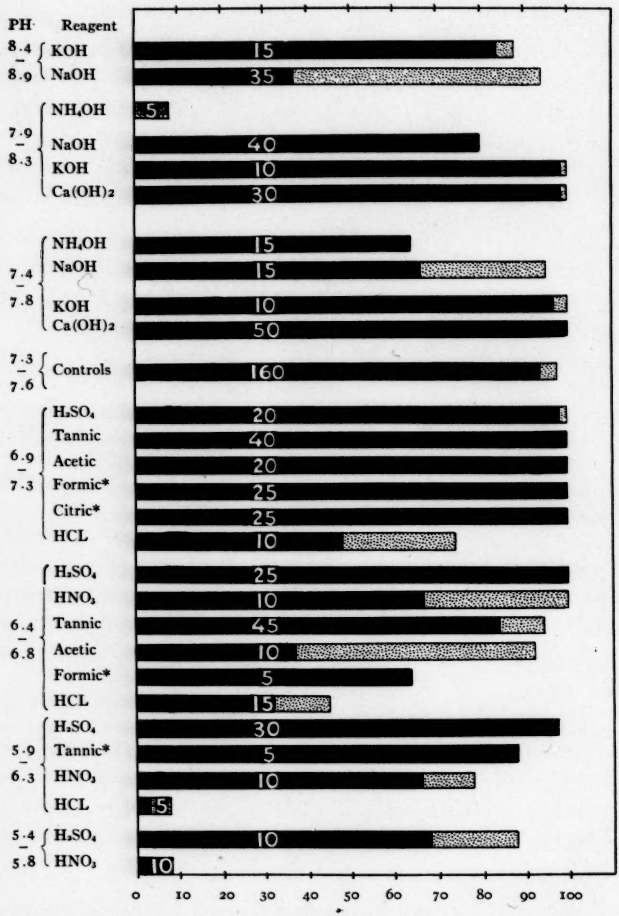

FIG. 3.—Showing the survival of *Helodrilus caliginosus trapezoides* to different reagents at different pH levels calculated in terms of possible earthworm days. The stippled portions show the deaths between 12 and 30 days' exposure. Starred chemicals were tested for 12 days only.

of *Helodrilus caliginosus trapezoides*, *H. foetidus*, and *Lumbricus terrestris* were placed in pots of this muck, which showed a pH of 5.4. A similar number of each species were placed in separate control pots in soil from which the worms were collected which was held at pH 7.6. At the end of 29 days all of the two first-named species were alive in both the experiment and the control. Those in the control were in better condition. One of the *L. terrestris* in the control had died; but all in the experiment were alive, though in poorer condition than were the survivors in the control. The worms in the muck soil showed a distinctly greater tendency to escape from the experimental pots than did those in the normal soil. The experiment shows, however, that these three species of worms are able to survive for 29 days in a naturally acid muck soil which, in nature, contains no earthworms. Olson (1928) reports similar experience with *L. terrestris*.

c) Reproduction.—The deposition of egg cocoons and the emergence of young worms furnishes a more severe test of the ability of worms to withstand different soil reactions. Lahr reports finding cocoons in soils testing pH 7.2 and 7.3. Under laboratory conditions Steagall (1925) reports finding young *Helodrilus foetida* in soil at pH 8.2 on the seventh day of the series. These lived for 14 more days, as long as the series ran, at which time the pH stood at 7.5. On the same day young were found in soil at 6.8; and on the sixteenth day in the same pot three more were found, with the pH at 6.5. In the same series three young were found in the last (twenty-first) day at pH of 6.0, 6.2, and 6.2, respectively. *Lumbricus terrestris* yielded young on the fourteenth day of the experiment at the same pH level. Megascolecidae gave young in all but one of the nine pots, ranging from pH 8.0 to 6.0, in soils treated with KOH and tannic acid, and in the alkaline and control soils up to pH 8.2 in another series treated with NaOH. The exception first noted occurred at pH 6.2. Hollister, with *Helodrilus caliginosus trapezoides*, found young worms in soils at pH 7.9–8.3, which had been treated with $Ca(OH)_2$ after 13 days and again after 21 days; and at pH 6.4–6.8 after an exposure of 38 days in soil treated with H_2SO_4. He also records finding worms copulating in treated soil with a pH of 8.0. The young worms or cocoons occurred in soils treated with

KOH, NaOH, $Ca(OH)_2$, and with H_2SO_4, but were not recorded from soils treated with other reagents.

d) *Survival in treated water.*—A set of preliminary experiments carried on in carbonate-free water by Torvik throws additional light on the problem. Without attempting to give these data in detail, it is sufficient to give the results plus the statement that here is a very direct method of getting specific effects of the H-ion concentration. Worms placed in finger bowls of carbonate-free water, treated with NaOH, gave the following results in 18 days:

No. of Worms	pH	Percentage of Possible Days of Survival
18.....	8.4–8.9	53
36.....	7.9–8.3	79
36.....	7.4–7.8	59
36.....	6.9–7.3	71

This shows a death-rate which bears no direct relationship to the degree of alkalinity of the water. Similar tests, using three acids at equivalent H-ion concentrations (pH 6.4–6.8), show that tannic acid is highly toxic while citric and sulphuric are almost non-toxic during an exposure of 6 days.

EARTHWORM REACTION EXPERIMENTS

Helodrilus caliginosus trapezoides was also used in the following experiments. A survey of the records for controls in a preliminary series, where tap water was used, shows that earthworms give a chance distribution on saturated filter paper when no disturbing factors are present. Ten such exposures gave a distribution of 29, 34, 26, 27, when the total numbers per paper are read by position from left to right. Correcting these figures for unusual clumping by discarding one entire set of exposures, the following results appear in the same order: 26, 24, 26, 24. The clumping appears to be a result of the accidental meeting of two or more worms on one paper. Such a reaction is interpreted as thigmotropic rather than chemotropic in nature. Where clumping was not avoided, a clump was recorded as such, and was considered as one worm, assuming that one worm was the original nucleus of the clump. When fewer than fifteen worms

were used in an experimental box, clumping was only occasional. Using only five worms, clumps were almost entirely absent. It was also noted that clumping was less frequent when conditions were generally favorable. An experiment using high-acid and high-alkaline papers almost invariably showed clumping when as many as eight worms were used. It was generally noted that, at the end of 1 hour, worms are found separate, extended, and relaxed when they are located on papers which are not decidedly stimulating. Individual coiling and clumping by two's (occasionally more) is characteristic of worms in adverse situations.

TABLE VI

REACTIONS OF *Helodrilus caliginosus trapezoides* TO CIRCUMNEUTRAL AND HIGH-SALT-CONCENTRATION TEST PAPERS

GROUP 1		
Circumneutral papers:	*vs.*	Slightly alkaline papers:
Total number of worms, 0		Total number, 15
pH 7.0		pH 7.8
GROUP 2		
Slightly alkaline, high concentration:	*vs.*	Slightly alkaline, low concentration:
Total number of worms, 14		Total number, 13
pH 7.6		pH 7.7

A type of preliminary experiment was devised to eliminate possible confusion in interpretation of results which might be due to high molecular concentration in papers treated with larger amounts of any reagent used. The results are given in Table VI.

In none of the foregoing tests did the final pH vary more than ± 0.2 from the figures indicated. The variation was about the same in each set. The standard stock (slightly alkaline) papers were prepared similarly, except that sufficient solution for all the papers was neutralized with sulphuric acid, before the papers were saturated. In four exposures there was perfect avoidance of the circumneutral papers. Similarly controlled experiments have indicated that these reactions are quite significant. In Group 2 the slightly alkaline papers were prepared exactly as before. The high-salt-concentration papers were prepared as the circumneutral papers in Group 1, except that after neutralization with the acid, 0.2 ml. of NaOH per paper

per exposure was added to give approximately the same H-ion concentration to all papers in the experiment.

In Group 1, worms avoid neutral papers which have received enough NaOH to give a pH 7.7–7.9, but which also have received enough acid to give a pH of 6.0–6.2, if the acid had been placed on otherwise untreated paper.

In Group 2, worms show no particular avoidance of any paper, all of which have approximately the same H-ion concentration, but half of which have about three times the molecular concentration of the rest. Here it is almost unmistakably true that the worms select a slightly alkaline medium regardless of the salt concentrations used.

The same fact is brought out in Table VII, where it will be noted that there is no considerable reaction against papers giving a final H-ion concentration of pH 9.0–9.2 when these are run in combination with papers with a final pH of 7.7 or 7.8. The amount of NaOH used in the preparation of such papers was carefully noted in a number of these experiments. The amounts used were 0.6 and 0.2 ml., respectively. From this it appears that doubling or tripling the molecular concentration of such a reagent has no marked effect on these animals when the saturated-filter-paper method is used.

By varying the amount of acid (sulphuric) similarly, it is possible to get a final H-ion concentration of pH 4.5–6.5. No marked effect on the reaction of the worms was noted except in the extremes of this range.

The data presented in Table VII are condensed from four series of experiments in which two acids and two alkalies were used. Eighty or more paper exposures were made in each series and the final results are based on 3,500 earthworm plantings. In Series I, NaOH and H_2SO_4 were used. In Series II, $Ca(OH)_2$ and H_2SO_4 were used with similar methods except that no experiments were run with high alkaline papers. Even with carefully saturated solutions it was not possible to get papers with a final reaction as high as pH 9.0. In Series III, tannic acid and NaOH were used. In Series IV, run with NaOH against H_2SO_4, half of the papers in any experiment were treated with the same concentration of acid and the others with one concentration of the alkali.

The data are presented by groups of a similar pH value and by reagents used. Group A, for example, shows the results of all experiments where highly acid papers were used in combination with any

TABLE VII

EARTHWORM REACTIONS TO FILTER PAPERS SATURATED WITH VARIOUS REAGENTS†

(Final readings are given in each case)

Group A. Range of final pH, 2.0–3.6. Mean pH, 3.1. Mode, 3.4–3.5

	pH OF OTHER PAPERS						
	3.6–4.9	5.0–5.9	6.0–6.9	7.3–7.9	8.0–8.9	9.0–9.5	9.6+
Reagent, H_2SO_4.....				NaOH			
Worms.....	---	---	---	---	3.3–30*	1.4–27*	---
Reagent, tannic acid				NaOH			
Worms.....	---	---	---	2–19*	0–42*	---	---
All reagents.....							
Worms.....	0–10*	---	2–17*	2–19*	1–42*	1–30*	0–17*
Percentage.....	100		89	90	98	97	100

Group B. Range of final pH, 3.6–4.9. Mean pH, 4.25. Mode, 4.4

	pH OF OTHER PAPERS						
	2.0–3.5	5.0–5.9	6.0–6.9	7.3–7.9	8.0–8.9	9.0–9.5	9.6+
Reagent, H_2SO_4.....				$Ca(OH)_2$			
Worms.....	---	---	---	2–30*	9–40	---	---
Reagent, H_2SO_4.....				NaOH			
Worms.....	---	5–11	---	4–32*	4–23*	8–26*	8–8*
Reagent, tannic acid				NaOH			
Worms.....	---	5–10	---	---	3–26*	3–27*	5–13*
Percentage.....	0.0*	65	85	88	85	80	56
Significant.....	?	?	yes	yes	yes	yes	no

Group C. Range of final pH, 5.0–5.9. Mean pH, 5.47. Mode, 5.4

	pH OF OTHER PAPERS						
	2.0–3.5	3.6–4.9	6.0–6.9	7.3–7.9	8.0–8.9	9.0–9.5	9.6+
Reagent, H_2SO_4.....				$Ca(OH)_2$			
Worms.....	---	---	14–14*	13–33	16–22	---	---
Reagent, H_2SO_4.....				NaOH			
Worms.....	---	11–5	13–18*	2–28	13–18	11–17	13–8
Reagent, tannic acid				NaOH			
Worms.....	---	10–5*	15–30*	---	---	12–26	19–5
Percentage.....	---	35–	60	87	58	65	29–
Significant.....	?	?	no	yes	yes	yes	yes

* Explanation at end of table.

TABLE VII—*Continued*

Group D. Range of final pH, 6.0–6.9. Mean pH, 6.35. Mode, 6.5

	pH of Other Papers							
	2.0–3.5	3.6–4.9	5.0–5.9	6.8–7.2	7.3–7.9	8.0–8.9	9.0–9.6	9.6+
Reagent, H_2SO_4				$Ca(OH)_2$				
Worms	---	---	14–14*	---	8–18	16–23	---	---
Reagent, H_2SO_4				NaOH				
Worms	---	---	18–13*	26–7*	12–31	13–19	16–23	---
Reagent, tannic acid				NaOH				
Worms	---	---	30–15*	---	13–36*	11–22	18–26*	30–3.3
Percentage	11	15	40 —	22 —	72	60	59	10 —
Significant	yes	yes	no	yes	yes	yes	yes	yes

Group E. Range of final pH, 6.8–7.2. Mean and mode, approximately 7.0

	pH of Other Papers						
	.....	.....	6.0–6.9	7.3–7.9	8.0–8.9	9.0–9.5	.....
Reagent, all except 3 exposures were H_2SO_4				NaOH			
Worms	---	---	5–25*	2–26	6–25*	10–40*	---
Percentage	---	---	78	93	81	80	
Significant	---	---	yes	yes	yes	? (too few exp.)	---

Group F. Range of final pH, 7.3–7.9. Mean pH, 7.73. Mode, 7.8

	pH of Other Papers							
	2.0–3.5	3.6–4.9	5.0–5.9	6.0–6.9	6.8–7.2	8.0–8.9	9.0–9.5	9.6+
Reagent, H_2SO_4					$Ca(OH)_2$			
Worms	---	30–2*	33–13	38–8	---	24–21	---	---
Reagent, H_2SO_4					NaOH			
Worms	---	32–4*	28–2	31–12	26–2	25–18*	13–12*	---
Reagent, tannic acid					NaOH			
Worms	19–2*	---	---	36–13*	---	35–20*	---	---
Percentage	9 —	12 —	13 —	24 —	7 —	41 —	48	---
Significant	yes	yes	yes	yes	yes	yes	no	

TABLE VII—*Continued*

Group G. Range of final pH, 8.0–8.9. Mean pH, 8.5. Mode, 8.6

	pH of Other Papers							
	2.0–3.5	3.6–4.9	5.0–5.9	6.0–6.9	6.8–7.2	7.3–7.9	9.0–9.5	9.6+
Reagent, H_2SO_4					$Ca(OH)_2$			
Worms	---	40–9	22–16	23–16	---	21–24	---	---
Reagent, H_2SO_4					NaOH			
Worms	30–3.3*	23–4*	18–13	19–13	25–6*	18–25	23–23	23–10*
Reagent, tannic acid					NaOH			
Worms	42–1*	28–3*	---	22–11	---	20–35*	25–30*	---
Percentage	2–	15–	42–	40–	19–	58	52	30–
Significant	yes	yes	yes	yes	yes	yes	no	yes

Group H. Range of final pH, 9.0–9.5. Mean pH, 9.2. Mode, 9.3

	pH of Other Papers							
	2.0–3.5	3.6–4.9	5.0–5.9	6.0–6.9	6.8–7.2	7.3–7.9	8.0–8.9	9.6+
Reagent, H_2SO_4					NaOH			
Worms	27–1.4*	26–3	17–11	23–16	40–10*	24–26*	23–23	29–6*
Reagent, tannic acid								
Worms	---	27–0.3*	26–12	26–18*	---	---	30–26*	---
Percentage	3–	20–	35–	41–	20–	58	48	20–
Significant	yes	yes	yes	yes	?	no	no	yes

Group I. Range of final pH, 9.6–10.0 (?)

	pH of Other Papers						
	2.0–3.5	3.6–4.9	5.0–5.9	6.0–6.9	7.3–7.9	8.0–8.9	9.0–9.5
Reagent, H_2SO_4					NaOH		
Worms	---	8–8	8–13	3.3–30	---	10–25*	6–29*
Reagent, tannic acid					NaOH		
Worms	---	15–5*	5–19	---	---	---	---
Percentage	0	44–	71	90*	---	70*	88*
Significant	?	no	yes	yes		yes	yes

† Symbols and abbreviations in the order used are:

--- Less than five paper exposures in this combination.

* Less than ten paper exposures in this combination.

Significant. Data significant by Student's formula.

? Somewhat questionable because of small numbers or beyond range of color standards used.

other set of papers whatsoever. The figures "2–19" in the pH 7.3–7.9 column indicate that the total number of worms found on the highly acid Group A papers in ten exposures was 2, contrasted with 19 worms, similarly found on ten low alkaline papers whose final pH values ranged between 7.3 and 7.9. Where more or less than ten paper exposures were actually made, in any case, the mean number per paper per exposure was obtained; and this was multiplied by ten. In this way, any set of results in any group is directly comparable with any other. All such cases are indicated.

The percentages are based on all exposures falling into one column. The "89," in column marked 6.0–6.9 in Group A, indicates that 89 per cent of all worms exposed to pH 2.0–3.5 papers and to pH 6.0–6.9 papers were found on the latter.

The statistical significance of the results in any one column was calculated by "Student's" formula except where the significance was obvious by comparison with some other group.

The data of Table VII show several rather obvious points which may be summarized as follows:

1. The high-acid group, A (mean pH 3.1), is avoided more than any other.

2. The next most acid group, B (mean pH 4.25), is avoided more than any other except papers of Group A, and possibly Group I. The difference between Group B and Group C is not statistically significant.

3. The milder acid group, C (mean pH 5.47), is clearly avoided more than any of the alkaline papers except those in Group I.

4. The mildest acid group, D (mean pH 6.35), is clearly avoided more than any of the alkaline papers except those of Group I. It is also avoided less than any of the more concentrated acid papers. The difference from Group C is not statistically significant.

5. The circumneutral group, E (pH 6.8–7.2), was certainly avoided more than were the two or three lower alkaline groups. Its relationship to the acid side is more doubtful. The results here show a probability of 1 in 23, where 1 in 20 is taken as the limit of significance. Analogous situations are not available. Since both tap and distilled water are known to be distinctly stimulating, the circum-

neutral papers used were all treated with some reagent and then changed to circumneutrality to avoid osmotic reactions.

6. Papers of the lowest alkaline group, F (mean pH 7.73), seem to be avoided less than those of any other group. The difference between this group and Group G, however, is not statistically significant. All other differences are significant.

7. Papers of the next more alkaline group, G (mean pH 8.5), are avoided less than those of any acid and less than those of the high-alkali group, I. The numerical difference between this group and Group H is not statistically significant.

8. Papers of the high-alkaline group, H (mean pH 9.2), are also avoided less than any of the acid papers and less than the high-alkaline group, I. Tested against less-alkaline papers, the results seem to favor the lower alkalies, but the differences are not statistically significant.

9. Papers of the most alkaline group, I (mean pH 9.7+), are avoided more than all other papers except those more acid than pH 3.5, or possibly those of Group B.

Considering avoidance as indicative of a negative reaction to a set of papers, and placing the pH symbol for the group in its proper order (most avoided first), the order of negativity appears as follows: 3, 4, 9.6, 6, 7, 9, 8, 7.7. While generally there is no clearly significant difference between adjacent groups, there are significant differences between 3 and 4, possibly between 6 and 7.0, between 7.0 and 7.7, also between 9 and 9.6. These worms tend to avoid treated filter papers the more the farther their reaction ranges from pH 7.3–7.9.

GENERAL CONSIDERATIONS

The proper starting-point for the discussion of the material here presented is found in the sweeping statement by Arrhenius (1921): "From these two experiments it is clear that the life of the earthworm is very strongly influenced by the reaction of the soil, so that they can live only in slightly acid or neutral soils"; and "The presence or absence of earthworms in the soil is dependent on its reaction, and this also determines the soil type, thus the reaction is the primary factor and the others are the result of its influences." The

field work of Olson, reported in 1928, and that of Lahr, carried on in 1926 and 1927, and here reported, show that in natural soils the earthworm distribution in Illinois, Indiana, and Ohio ranges between soil pH 5.4 and 8.7. The former reports *Helodrilus caliginosus trapezoides* as occurring most abundantly at pH 8.0 in Ohio, and the latter found worms of different species common in soils having a pH range of from 5.8 to 8.3. Lahr also reports sampling the earthworm population of soils with a pH of 7.3 near Wolf Lake, Indiana, which yielded worms at the rate of 836,352 per acre in the upper 8 inches, although Arrhenius concluded that earthworms are absent from Egyptian soils[1] because these soils have a pH of 7.5 or higher.

Olson's experience in keeping *Lumbricus terrestris* alive for 4 weeks in a series of pot cultures in natural soils ranging from pH 4.5 to 8.4 also bears on this point. One might dismiss the discrepancy thus far indicated as being due to the fact that Arrhenius had artificially controlled the reaction of the soils used in his short experimental series, and that in some manner the treatment given had made the soils unsuitable for earthworms. But that such artificial control of the soil reaction is not necessarily toxic is shown by the work in this laboratory, begun by Steagall in 1925 and repeated and extended by Torvik in 1926 and by Hollister in 1928. These pot-culture tests clearly show that at least one species of earthworm, *Helodrilus caliginosus trapezoides*, which is the most common one in this locality, and which lives near by in nature in soils from pH 5.6 to 8.0, will live for more than 3 months in laboratory pot cultures in soils with an artificially controlled reaction ranging from a mean of 6.15 to 8.44, and will live almost or quite quantitatively for 30 days in such soils, ranging from 5.9 to 8.3.

As was expected, earthworm survival depends to some extent on the chemical used as well as on the H-ion concentration to which the worm is exposed. Soils made alkaline with NH_4OH or acid with HCl were noticeably more toxic than were soils treated with other reagents to give the same alkaline reaction. Calcium hydroxide and H_2SO_4 were particularly favorable reagents to use in altering the soil reaction, in part because of their less-harmful effects on the physical

[1] Mr. Gordon Gates, of Rangoon, has told us that he has collected earthworms in Egypt. He could not give the soil reaction.

condition of the soil, which is obviously one factor in determining the suitability of soil for an earthworm habitat. The work of Skeen indicates another type of beneficial action of calcium. Such ions as iron and aluminum are distinctly toxic to some plants in both soil and water cultures. The addition of calcium in appropriate amount renders both of these ions non-toxic. One of these toxic agents was found to be from five to seven times as toxic as the H ion in equivalent concentrations.

Alkalies added to local soils tend to make them sticky or heavy, and these conditions in themselves tend to make such soils less favorable for earthworms. The toxicity of soils treated with NH_4OH appears, however, to be due to the NH_4 ion or to the action of the volatile molecule NH_3, rather than to the effect of the hydroxyl ion or the physical changes in the soil.

Relatively more NH_4OH and $Ca(OH)_2$ were required to bring the soil to a given pH level than with NaOH or KOH. The ammonium-hydroxide treated soils were most toxic, and the calcium-hydroxide treated soil were least so, giving further evidence that the toxicity of the soils was not primarily due to the concentration of the H ion.

With the acid-treated soils at almost any pH level selected, those treated with HCl are the most toxic. Hydrochloric acid and HNO_3 have a similar degree of ionization but are not equally toxic in soils. Both produce soils more distinctly toxic than does H_2SO_4. The observed effects may be due to specific differences in toxicity of the anions concerned, but there is a possibility that the effect is less direct. Certainly the sulphates formed by soil substances with sulphuric acid would tend to be less soluble than either the chlorides or the nitrates. That the situation is difficult to interpret is shown by the fact that tannic acid is markedly toxic to earthworms in CO_2-free water but stands next to H_2SO_4 in producing non-toxic soils. The certain conclusion is that the H ion is not the only factor acting and that frequently it is not the most important factor.

Anderson (1929) reports studies on soil colloids when the exchangeable bases are substituted by different cations which bear upon the relative importance of the H ion in determining soil conditions. The order of cation effects on heat of wetting and on moisture

equivalent is reported to be: Ca > Mg > Na > H > K. Similarly, the order in swelling, adsorption of water vapor, cataphoresis, and even of pH is reported as approximately Na > K > Ca > Mg > H.

In the survival experiments, such reagents as ammonia or hydrochloric acid in soil cultures and tannic acid in carbonate-free water showed their toxicity within a relatively short time. High toxicity is apparent almost immediately. This appears to be a direct ionic or molecular effect. Early mortality also appears, in some cases, to be due to poor aëration of the soils when these have been rendered nonporous by certain reagents. High toxicity should and does produce an early mortality limited largely to soils treated with certain reagents, and not shown in all soils at one pH level. Death of the worms in a given culture after a period of 2 or more weeks may be the result of the toxicity of the treated soil, to the lack of resistance of individual worms, or to starvation. Particularly in NaOH-treated soils, worms living for a week or more began to appear transparent. Obviously such worms were eating little or none of the soil, and survival in such cases must hinge to some degree on the fasting limits of the worm.

Several allusions to the physical condition of the soil have been made before. Both Steagall and Torvik reported changes in the physical condition of the same kind of soil treated with different reagents. Soils treated with KOH, particularly, were marked as sticky or puddled. This is not true for $Ca(OH)_2$ soils but may hold for other hydroxides. Such conditions reduce the aëration of the soil and must adversely affect the respiration of the experimental animals even when no direct toxicity is operative. Casual observations by different experimenters, the field work of Lahr, and that of Olson show that worms are not abundant in poorly aërated soils. Heavy clay soils are almost impervious and are a poor medium for this, if for no other, reason. It is generally noted that poorly drained soils show high acidity, and poor aëration is considered as a factor in the production of this acidity. Such soils may inhibit the movements of earthworms because of oxygen shortage. This possibility has not been carefully investigated experimentally, but certain of the pot cultures in this laboratory point strongly toward this explanation.

The observations of Salisbury (1923) and J. F. V. Phillips that

earthworms tend to be more abundant in circumneutral soils are capable of two explanations: In the first place, they may find their optimum conditions in such situations in certain regions, even though our observations and those of Olson show that this is not necessarily true. On the other hand, Salisbury's analyses show that earthworm castings approach neutrality more closely than does the soil of their habitat. One would then expect that if many earthworms were present there would be a distinct tendency toward neutrality, owing to their effect upon the environment. Such an effect would be more apparent in lightly buffered situations. Hollister's observations indicated that earthworms may affect the H-ion concentration of acid- or alkali-treated filter papers in some cases to the amount of 0.2 of a pH unit per worm per hour. This happens without ingestion of any material, and after the worms have been washed free from dirt or excess of slime. That earthworms may themselves be the cause of a certain amount of circumneutrality is obvious; to what extent this is true in natural soils remains to be tested.

The reaction experiments show that earthworms will react to differences in the H-ion concentration, and support the survival tests described in this paper and the field experiences of both Olson and Lahr, in that they show that local earthworms are most positive to lower degrees of alkalinity, avoiding acid, neutral, and highly alkaline situations. The experiments upon the effect of concentration of chemicals used, together with the preceding work of Hurwitz and Shohl, indicate that this is due to reaction to the H-ion concentration. *Helodrilus caliginosus trapezoides*, at least, can react to the H-ion situation, but this is only one among various environmental factors affecting earthworms. In the reaction experiments as well as in survival tests and in field distribution, local earthworms are shown to be euryionic, rather than stenionic, although different species may have different pH ranges, in the same way that they show differential tolerance for other phases of their environment.

SUMMARY

1. A field investigation of the relation between earthworm distribution and pH and other important soil factors in the Chicago area and in Indiana showed that the usual characteristics of soil in

which earthworms were found most abundantly were: medium texture, a good supply of organic matter, constant moisture, friability, good aëration, and a neutral or slightly alkaline reaction.

2. Earthworms were not found in peat or in the mucks of higher organic content, but their absence was not due necessarily to the H-ion concentration, since worms lived 29 days in the laboratory in muck at a pH of 5.4.

3. Earthworms were found in soils of a pH range of 5.6–8.3.

4. They were found in abundance in soils ranging in reaction from pH 7.0 to pH 7.8.

5. The order of frequency of earthworms found in nature in the localities studied is *Helodrilus* (*Allolobophora*) *caliginosus trapezoides* Michaelsen, *Octolasium lacteum* Orley, *Lumbricus terrestris* Hoffmeister, *Helodrilus* (*Eisonia*) *foetidus* Michaelsen, *H.* (*Eisenia*) *roseus* Savigny, and *Lumbricus rubellum* Hoffmeister.

6. All six species studied tolerate a wide range in pH. There is probably a slightly differential range of tolerance for the species studied, with *Helodrilus caliginosus trapezoides* most tolerant of those investigated.

7. Soil reaction per se has very little to do with earthworm distribution in the region observed. There may well be indirect effects of pH upon earthworms through its effect upon physical conditions of soil and soil flora, which become factors in controlling earthworm abundance.

8. The viability of the earthworm *H. caliginosus trapezoides* has been tested independently by two investigators, with pot cultures of soils artificially set at different H-ion concentrations by the use of four alkalies and seven acids, in tests running as long as 109 days. Where conditions have been comparable, the results in all tests are essentially similar, and show that, in general, slightly alkaline soils seem a more favorable medium than acid soils; but even those worms placed in natural muck or local-habitat soils treated with sulphuric acid show an almost perfect viability for three weeks at pH 5.6.

9. Evidences of breeding are reported from soils artificially controlled from pH 6.0 to 8.3.

10. Soils treated with different reagents, when compared at the same pH level, show a marked difference in toxicity. This difference

in effect may be of a specific ionic or of a molecular nature. The direct effect may be upon either the worms or the soil; the bulk of the survival evidence supports the thesis that the H-ion concentration, in itself, is not the most lethal factor concerned.

11. In general, *H. caliginosus trapezoides*, when tested against two hydroxides and two acids on saturated filter papers, tends to avoid the acid papers but not the alkaline, until a pH of 9.6 or more is reached. Circumneutral papers are avoided somewhat less than an acid paper at pH 5.5. The worms tend to avoid the treated filter paper the more the farther its reaction ranges from pH 7.3 to 7.9.

12. These studies confirm the work of Steagall and Olson rather than that of Arrhenius.

LITERATURE CITED

ALLEE, W. C. 1923. Studies in marine ecology. III. Some physical factors related to the distribution of littoral invertebrates. Biol. Bull., XLIV, 205–53.

ALLEE, W. C., and TORVIK, MAGNHILD. 1926. Factors affecting animal distribution in a small stream of the Panama rain-forest in dry season. Jour. Ecology, XV, 66–71.

ANDERSON, M. S. 1929. The influence of substituted cations on the properties of soil colloids. Jour. Agr. Res., XXXVIII, 565–84.

ARRHENIUS, O. 1921. Influence of soil reaction on earthworms. Ecology, II, 255–58.

———. 1922. Hydrogen-ion concentration, soil properties and growth of higher plants. Arkiv. f. Bot., XVIII, 1–54, bibliography.

ATKINS, W. R. G. 1922*a*. The hydrogen-ion concentration of sea water in its biological relations. Jour. Marine Biol. Assoc., XII, 717–80.

———. 1922*b*. Some factors affecting the hydrogen-ion concentration of the soil and its relation to plant distribution. Proc. Roy. Dublin Soc., XVI, 369–412.

ATKINS, W. R. G., and LEBOUR, M. V. 1923. The hydrogen-ion concentration of the soil and of natural waters in relation to the distribution of snails. *Ibid.*, XVII, 233–40.

———. 1924. The habits of *Limnaea truncutula* and *Limnaea pereger* in relation to hydrogen-ion concentration. *Ibid.*, XVII, 327–31.

BEHRE, ELINOR. 1928. Some distributional relations of fresh water fishes in Panama west of the Canal Zone. *Ibid.*, IX, 421–28.

BIRD, HENRY. 1921. Soil acidity in relation to insects and plants. Ecology, II, 193–98.

BOUYOUCAS, G. J. 1928. Making a mechanical analysis of soils in fifteen minutes. Soil Sci., XXV, 473–80.

BRETT, A.T. 1883. The earthworm. Trans. Hertfordshire Nat. Hist. Soc., II, 142.

BRIGGS, L. J. 1904. The centrifugal method of soil analysis. U.S. Dept. Agr., Bureau of Soils, Bull. 24.

CALDWELL, A. LEE. 1928. Hydrogen-ion concentration and pH. Jour. Amer. Pharm. Assoc., XVII, 529–34.

CLARK, W. M. 1928. The determination of hydrogen ions. Baltimore: Williams and Wilkins Co. Pp. 717; bibliography.

COKER, R. E. 1925. Observations of hydrogen-ion concentrations and of fishes in North Carolina and Massachusetts. Ecology, VI, 52–66.

COLLETT, M. E. 1919. The toxicity of acids to ciliate *Infusoria*. Jour. Exp. Zoöl., XXIX, 443–73.

COMBER, N. M. 1922. The flocculation of soils. Jour. Agr. Res., XII, 372–86.

COWLES, R. P., and SCHWITALLA, A. M. 1923. The hydrogen-ion concentration of a creek, its waterfall, swamp, and ponds. Ecology, IV, 402–17.

DARBY, H. H. 1929. The effect of the hydrogen-ion concentration on the sequence of protozoan forms. Archiv. f. Protistenkunda, LXV, 1–37.

DARWIN, CHARLES. 1881. The formation of vegetable mould through worms with observations on their habits. London.

FISHER, E. A. 1921. Studies in soil reaction. I. A résumé. Jour. Agr. Sci., 19–45, bibliography.

FISHER, R. A. 1925. Application of "Student's" distribution. Metron, V, 3–17.

FLETCHER, C. C., and BRYAN, H. 1912. Modifications of the method of soil analysis. U.S. Dept. Agr., Bureau of Soils, Bull. 84.

HOAGLAND, D. R. 1917. The effect of hydrogen and hydroxyl ion concentration on the growth of barley seedlings. Soil Sci., III, 547–59.

HOLLISTER, P. L. 1929. Resistance and reaction of earthworms with respect to hydrogen-ion concentration of soils. Master's thesis, University of Chicago Library.

HURWITZ, S. H. 1910. The reactions of earthworms to acids. Proc. Amer. Acad. Arts and Letters, XLVI, 65–83.

HYMAN, L. H. 1925. On the action of certain substances on oxygen consumption. Biol. Bull., XLIX, 288–322.

JEWELL, MINNA E. 1920. Effect of hydrogen-ion concentration on regeneration and metabolism in tadpoles. Jour. Exp. Zoöl., XXX, 461–507.

———. 1922. The fauna of an acid stream. Ecology, III, 22–28.

JEWELL, MINNA E., and BROWN, H. 1924. The fishes of an acid lake. Trans. Amer. Micr. Soc., XLIII, 77–84.

JOFFE, J. S. 1920. The influence of soil reaction on the growth of alfalfa. Soil Sci., X, 301–7.

JUDAY, C.; FRED, E. B.; and WILSON, F. C. 1924. The hydrogen-ion concentration of certain Wisconsin lake waters. Trans. Amer. Micros. Soc., XLIII, 177–90.

KELLEY, W. P., and BROWN, S. M. 1926. Ion exchange in relation to soil acidity. Soil Sci., XXI, 289–302.

KLUGH, A. BROOKER. 1924. Factors controlling the biota of tide pools. Ecology, V, 192–97.

KURZ, HERMAN. 1923. Hydrogen-ion concentration in relation to ecological factors. Bot. Gaz., LXXVI, 1–29.

LAHR, J. P. 1929. Earthworm distribution in relation to the hydrogen-ion concentration of the soil. Master's thesis, University of Chicago Library.

MCCLENDON, J. F., and MEDES, GRACE. 1925. Physical chemistry in biology and medicine. Philadelphia: W. B. Saunders Co. Pp. 425; bibliography.

MICHAELSEN, W. 1900. *Oligochaeta*. Das Tierreich (Berlin), XXI, 575.

———. 1910. Zur Kentnis der Lumbriciden und ihrer Verbreitung. Ann. Mus. Zool. Acad. Imp. Sci. St. Petersburg (Leningrad), XV, 1–74.

MOORE, BARRINGTON. 1922. Earthworms and soil reaction. Ecology, III, 347–48.

NOLAND, LOWELL. 1925. Factors influencing the distribution of fresh water ciliates. *Ibid.*, VI, 437–52.

NOMURA, E., and OHFUCHI, S. 1928. Seasonal changes in photic orientation in *Allolopophora foetida*. Sci. Rep. Tokyo Univ., III, 97–112.

OLSON, HENRY W. 1928. The earthworms of Ohio. Ohio Biol. Survey Bull. No. 17, pp. 47–90.

PARKER, G. H., and METCALF, C. R. 1907. The reactions of earthworms to salts. Amer. Jour. Physiol., XVII, 55–74.

PHILLIPS, E. F. 1923. Earthworms, plants and soil reactions. Ecology, IV, 89–90.

PHILLIPS, J. F. V. 1924. Biology, ecology and silviculture of stinkwood. So. African Jour. Sci., XXI, 275–92.

POWERS, EDWIN B. 1921*a*. The variation of the condition of the sea water, especially hydrogen-ion concentration, and its relation to marine organisms. Puget Sound Biol. Sta. Publ. 2, pp. 369–85.

———. 1921*b*. Experiments and observations on the behavior of marine fishes toward hydrogen-ion concentration in relation to their migratory movements and habitat. *Ibid.;* No. 3, pp. 1–22.

———. 1922. The physiology of the respiration of fishes in relation to the hydrogen-ion concentration of the medium. Jour. Gen. Physiol., IV, 305–17.

———. 1923. Absorption of oxygen by the herring as affected by the CO_2 tension of the sea water. Ecology, IV, 307–11.

———. 1925. Alkaline reserve of the blood plasma of *Cymatogaster* in relation to CO_2 and O_2 tension and alkalinity of sea water. Puget Sound Biol. Sta. Publ. 1925, pp. 337–60.

REED, GUILFORD, and KLUGH, A. BROOKER. 1924. Correlation between hydrogen-ion concentration and biota of granite and limestone pools. Ecology, V, 272–76.

RUSSELL, EDWARD J. 1921. Soil conditions and plant growth. New York: Longmans, Green & Co. Pp. 406; bibliography.

SALISBURY, E. J. 1922. Stratification of hydrogen-ion concentration in relation to leaching and plant succession with special reference to woodlands. Jour. Ecol., IX, 220–41.

SALISBURY, E. J. 1923. The influence of earthworms on soil reaction and the stratification of undisturbed soils. Jour. Linn. Soc. (Botany), XLVI, 415–25.

SALTER, R. M., and MCILVAINE, T. C. 1920. Effect of reaction of solution on germination of seeds and on growth of seedlings. Jour. Agr. Res., XIX, 73–95.

SAUNDERS, J. T. 1924. The effect of the hydrogen-ion concentration on the behavior growth and occurrence of *Spirostomum*. Proc. Cambridge Phil. Soc., I, 189–203.

SHELFORD, V. E. 1923. The determination of hydrogen-ion concentration with fresh water biological studies. Bull. Ill. Nat. Hist. Surv., XIV, 379–95.

———. 1925. The hydrogen-ion concentration of certain western American inland waters. Ecology, VI, 279–87.

SHOHL, A. F. 1914. Reactions of earthworms to hydroxyl ions. Amer. Jour. Physiol., XXXIV, 384–404.

SKEEN, J. H. 1929. The tolerance limit of seedlings for aluminum and iron and the antagonism of calcium. Soil Sci., XXVII, 69–90.

SMITH, FRANK. 1917. North American earthworms of the family Lumbricidae in the collection of the U. S. National Museum. Proc. U. S. Nat. Mus., LII, 157–82.

———. 1928. An account of changes in earthworm fauna in Illinois. Bull. Ill. Nat. Hist. Surv., XVII, 347 (Art. 10).

SMITH, H. W., and CLOWES, G. H. A. 1924*a*. The influence of carbon dioxide on the velocity of division of marine eggs. Amer. Jour. Phys., LXVIII, 183–203.

———. 1924*b*. The influence of hydrogen-ion concentration on unfertilized *Arbacia*, *Asterias*, and *Chaetopterus* eggs. Biol. Bull., XLVIII, 304–22.

STEAGALL, MARY M. 1925. Resistance of earthworms to soil acidity. Trans. Ill. State Acad. Sci., XVIII, 121–32.

STICKNEY, FENNER. 1922. The relation of the nymphs of a dragon-fly to acid and temperature. Ecology, III, 250–54.

TORVIK, M. M. 1926. Earthworm resistance to changes in the hydrogen-ion concentration of the soil. Master's thesis, University of Chicago Library.

WHERRY, E. T. 1922. Soil acidity, its nature, measurement, and relation to plant distribution. Ann. Rep. Smith. Inst. 1922, pp. 247–68.

———. 1923. A soil acidity map of a Long Island wild garden. Ecology, IV, 395–402.

———. 1924. Soil acid preferences of earthworms. *Ibid.*, V, 309–10.

———. 1927. Divergent soil reactions of related plants. *Ibid.*, VIII, 197–206.

A STUDY OF THE ORIGIN AND DIFFERENTIATION OF THE SUPRARENAL GLAND IN THE CHICK EMBRYO BY CHORIO-ALLANTOIC GRAFTING

(Two figures)

B. H. WILLIER
Hull Zoölogical Laboratory, University of Chicago

INTRODUCTION

THE composite nature of the suprarenal has long been recognized. In the higher vertebrates two different kinds of tissues, generally known as cortical and medullary from their arrangement in mammals, are involved in its makeup. In the chick suprarenal, with which this paper deals, the medullary and cortical tissues occur in the form of cords irregularly intermingled and not topographically arranged as the terminology suggests. The theory generally accepted concerning the origin of the two components by descriptive embryologists is that the cortical cords arise from the coelomic epithelium over the Wolffian body anterior to the genital ridge and that the medullary cords are contributed by cells derived from the sympathetic nervous system. Since these two components arise from such diverse primordia, it appeared possible to analyze by chorio-allantoic grafting a number of problems relative to their origin and relationship in the formation of the suprarenal. In the first place, there is the problem of the time of origin or segregation of the potential adrenal cells. Secondly, the question of the differentiation of the sympathetic nerve cells into chromaffin cells of the medullary cords may be examined by experimental methods for the first time. More specifically, since two sympathetic nerve trunks develop in birds, we wish to ascertain whether cells from the primary, the secondary, or both trunks are essential to the formation of the medullary cords. Finally, the developmental correlations between the cortical cords and the sympathetic cells furnish an important topic for investigation.

In analyzing these problems, the Wolffian body which bears the cortical primordium is isolated not only before, but at various stages

after, cells from the sympathetic nerve trunks have migrated into the Wolffian body and then transplanted to the chorio-allantoic membrane of a host embryo. In the present paper only those grafts obtained from isolations made after the cells of sympathetic nerve origin have reached the site of the cortical primordium are considered. Two preliminary reports of the results given in this paper have been published (Willier, 1928 and 1929).

METHODS

The Wolffian bodies of donor embryos were isolated and transplanted to the chorio-allantoic membranes of host chick embryos. By using a dissecting binocular microscope and two sharply-pointed dissecting needles, the Wolffian body may, after a little practice, be easily isolated. The Wolffian body is at first teased loose at one end, usually the posterior end, and then it may be easily stripped throughout its entire length from the rest of the embryo. In the majority of isolations it comes free from the other embryonic parts and includes, at least in many cases observed, all of the mesonephric tubules, as any left behind may be easily recognized under the binocular dissecting microscope. A histological examination of the grafts gives proof of the purity of the isolation, since only in rare cases is any tissue other than the Wolffian body and its associated organs found.

The Wolffian body was then made to adhere to the tip of one of the dissecting needles by means of which it was transferred to the surface of the chorio-allantoic membrane of a host embryo. The other details of the technique of the operation are essentially similar to those previously reported (Willier, 1924, p. 68).

Both donor and host embryos were obtained from the eggs of either mongrel or S. C. brown leghorn breeds. The donor embryos were incubated 4, 5, $6\frac{1}{12}$, $6\frac{3}{4}$, 7, 9, 10, 11, 12, and 13 days, thus giving a number of early, as well as the later, stages in the development of the adrenal. The host embryo had been incubated 9 days when the graft was implanted. The grafts after a period of 9 days (8 days in a few cases) on the host were removed and prepared for histological examination. They were fixed in Bouin's solution and stained mostly with Heidenhain's iron haematoxylin.

For purposes of comparison a few normal adrenals of ages corresponding to those of the engrafted suprarenal were examined histologically.

ANALYSIS OF THE SUPRARENAL GRAFTS

1. GENERAL STATEMENT OF RESULTS

A total of ninety grafts of the Wolffian body have been examined. Typically each graft consists of a more or less degenerate Wolffian body and the organs associated only. Of the associated organs, the gonad and suprarenal are, with few exceptions, always present; and in grafts from isolations made on or after the fifth day a metanephros is usually present in addition. Only in exceptional cases are cartilage and liver also found. The study of the differentiation of the gonad has already been described (Willier, 1927). Detailed studies on the metanephros and Wolffian body will be presented in subsequent papers, so that this report will treat of the suprarenal only.

2. GRAFTS OF THE CORTICAL RUDIMENT BEFORE THE FORMATION OF THE SECONDARY SYMPATHETIC NERVE TRUNKS. CORTICAL RUDIMENT AND PRIMARY SYMPATHETIC NERVE CELLS IN CONTACT

a) *Stage of development of the suprarenal primordia when implanted.*—The isolations of the Wolffian body were made on the fourth (96 hours and over) and the fifth (120 hours and over) days. Early during the fourth day of incubation a thickening of the coelomic epithelium, known as the suprarenal zone or cortical primordium, appears on the medioventral aspect of the anterior end of the mesonephros. It begins about half a millimeter behind the glomeruli of the pronephros and extends posteriorly for about a millimeter, where it becomes more or less continuous with the anterior end of the germinal epithelium. During the latter part of the fourth day nodules of cells are proliferated from the suprarenal zone into the mesenchyme which lies ventrolateral to the dorsal aorta. By the end of the fourth day these cortical nodules are only slightly connected with the coelomic epithelium and soon (by the 113th hour according to Soulié 1903, p. 270) become completely separated.

During the fourth and fifth days on each side of the dorsal surface of the aorta is a cord of nerve cells known as the primary sym-

pathetic nerve trunk or chain. It shows slight ganglionic enlargements, each of which is opposite a spinal ganglion. The primary sympathetic nerve trunks reach their maximum development at 120 hours, after which they gradually disappear. At 96 hours small aggregations of sympathetic cells are in rather close contact with the medial surface of the cortical primordium. Their origin from the primary sympathetic cord is evidenced by an agreement in structure of the cells and by intervening strands of cells. According to Rau and Johnston (1923, p. 759), this contribution from the primary sympathetic chain eventually forms the medullary or chromaffin cells of the suprarenal body.

Investigators do not agree as to the exact relation of the sympathetic cells to the cortical nodules. Harris (1928) found them in rather close contact but was unable to distinguish any actually intermingled with the cortical nodules. However, according to Fusari (1892 and 1893), sympathetic cells are between the cortical nodules at 96 hours. Also, Goormaghtigh (1921, p. 146) reported that ganglion, but not chromaffin, cells are found between the cortical nodules of an embryo incubated 4 days and 16 hours (see his Fig. 8).

b) *Description of the suprarenal of the graft.*—A total of twenty-eight grafts have been examined. Half of these are from isolations of Wolffian bodies made on the fourth day, and half on the fifth day. In only one graft (200–1), which was obtained from a right Wolffian body, is the suprarenal absent (the gonad is also absent).

In all cases the suprarenal formed is a definitely circumscribed organ with both cortical and medullary cords. Usually it is a comparatively large body. In one graft, derived from a right Wolffian body, it is quite small (no gonad is present). It is surrounded by mesenchyme of the chorio-allantoic membrane, but no definite capsule of connective tissue is formed. The cortical cords make up the bulk of the organ and are anastomosed with each other so as to form a network. In the meshes occur the medullary cells and spaces containing blood corpuscles. The medullary cells lie outside the blood spaces next to the cortical cords. The blood spaces are of variable diameters. In the center of the typical suprarenal of the graft they have the form of sinusoids, being molded on the surface of the cords without intervening mesenchyme. In the outer and

more compact portion they are of capillary size. In the typical adrenal of the graft a blood vessel may be traced from the chorio-allantoic vessels to the central sinusoids. The point of its entry into the suprarenal resembles a hilum in general topography. In these particulars the suprarenal of the graft resembles closely the normal of a corresponding age. In several grafts (182–16, 200–4, 201–3, and 203–3) the sinusoids are uniformly distributed rather than centrally situated. In still others (182–3, 183–1, 183–2, 200–7, 201–2, and 203–16) the majority of the blood spaces are of capillary size, making the adrenal a more compact gland.

Histologically, the cortical and medullary cords appear to be as well differentiated as in the normal of a corresponding age (see Fig. 1). The cortical cords are cylindrical in form, with the light-staining cells radiating from the center. There is no central lumen. In some cases the cells are less regularly arranged. Mitotic figures are somewhat common in the cortical cords. The so-called "medullary" cords are easily distinguished by their darker staining. The cytoplasm of the medullary cell is characterized by fine, dark-staining granules. Commonly the medullary cells appear in the form of strands, groups, or as isolated cells rather than definite cords. They are closely applied to the cortical cords, so close in some instances as to form an intimate part of them. Mitosis is apparently rare in the medullary cells, for even after much searching only one positive case has been found. In this particular cell the characteristic dark-staining granules of the cytoplasm are very apparent.

The distribution of the medullary cords and cells among the cortical cords is somewhat variable. In the majority of grafts they are more common at the surface than in the center of the suprarenal. Often they form a rather distinct layer about the periphery. Their relationship to the sympathetic cells which are situated also at the surface is discussed below. The medullary cords may be found only at or near the surface (as in 201–3) or in certain areas of the interior, other areas being free of them as shown in Figure 2. In some cases the medullary cells are uniformly distributed throughout the suprarenal. That the medullary cords on the interior arise by a process of penetration from those at the surface is evidenced by intervening strands of medullary cells. No fundamental difference could be

found in the distribution of the medullary cells in the grafts obtained from isolations of the Wolffian body made on the fourth from those made on the fifth day.

Small masses of groups of sympathetic cells are found in contact with, or adjacent to, the surface of the suprarenal in all of the grafts.

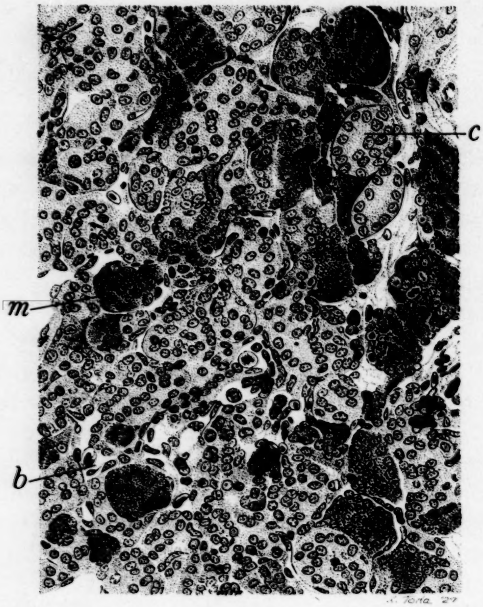

FIG. 1.—Experiment 183–2. Detailed histology of a suprarenal differentiated in a graft of a Wolffian body which was isolated from a 4-day chick embryo and grown for 9 days on a female host embryo. *c*, cortical cord; *m*, medullary cord; *b*, blood space. ×300 (initial ×600).

With one exceptional graft (182–16) they have not been found within the substance of the suprarenal. Typically, they are not in contact with the cortical cords but are separated from them by medullary cells and cords, or even mesenchyme in some instances. These groups are scattered, as a rule, along one side or end, leaving much of the surface of the suprarenal free of them.

It is interesting to note that in four grafts (183–2, 183–3, 200–6, 203–16) additional masses of sympathetic cells are found in the

immediate vicinity but not in contact with the suprarenal. In one case a nerve fiber leads away from the mass. In these four cases no

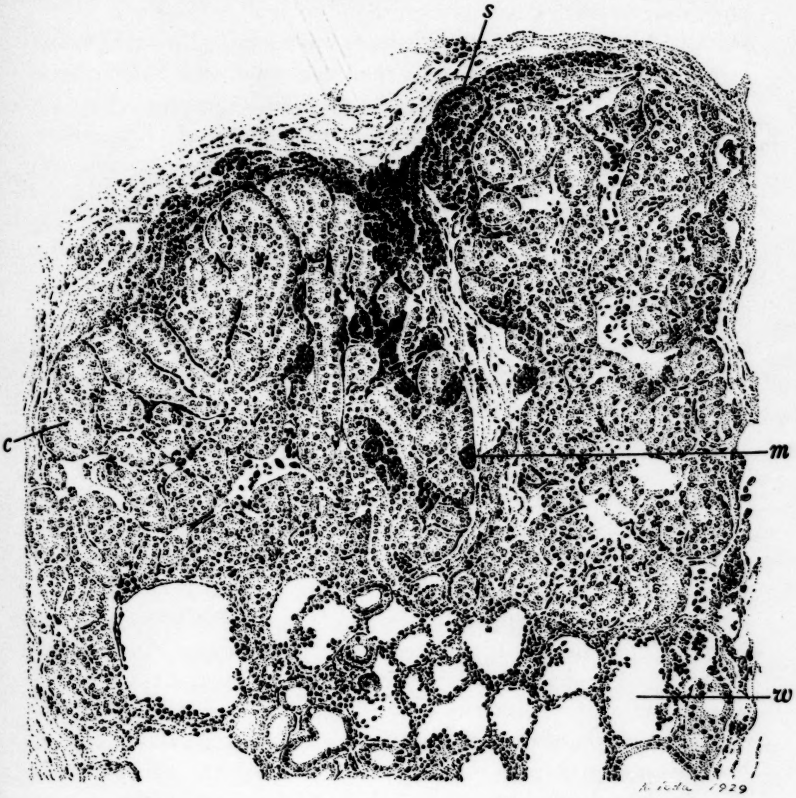

FIG. 2.—Experiment 201–1. Section of a suprarenal showing penetration of medullary cells from a mass of sympathetic cells (*s*) at the surface. Differentiated from a graft of a Wolffian body isolated from a 4-day embryo and grown for 9 days on a male host embryo. *c*, group of cortical cords free of intervening medullary cells; *m*, medullary cord; *w*, portion of Wolffian body. ×150 (initial ×200).

medullary cells are found, indicating that they form only when the sympathetic cells are contiguous with the suprarenal substance.

The masses of sympathetic cells in close association with the suprarenal vary in number and composition. In general they are

distinctly less common than in the grafts obtained from isolations of the Wolffian body made after the sixth day. In five grafts they are so scarce that I have found them only after the most careful search. Taking the grafts as a whole, three kinds of cells are found in, or intimately associated with, these masses of sympathetic cells, viz., ganglionic, non-ganglionic, and medullary or chromaffin cells. The ganglion cells are large and a little irregular in form, with a large nucleus and considerable cytoplasm. The non-ganglionic cell, on the other hand, is smaller and somewhat rounded in outline; its nucleus is smaller and the amount of cytoplasm is definitely less. These cells apparently correspond to the two types described by Soulié as ganglionic and parasympathetic, and by Rabl (1891) as ganglionic and embryonic ganglion cells. The medullary or chromaffin cell has been characterized above. When compared with the non-ganglionic cell, its nucleus is found to be similar in form and structure, but its cytoplasm is greater in amount and full of dark-staining fine granules.

These three types of cells may be variously combined in the masses. Three kinds of combinations have been found, namely: (1) all three types of cells, (2) non-ganglionic and medullary cells, and (3) ganglionic and medullary cells. Masses having either all three or any two kinds of cell combinations may appear in the same graft, or grafts may appear where only one kind is found. In the first combination any type of cell may predominate, but usually the non-ganglionic or medullary cell is the more common; in the second combination either type of cell may predominate in number; while in the third combination the medullary cells exceed in number. In grafts 182–3, 182–5, 182–12, 183–2, and 203–16, which include 4- and 5-day isolations, both the ganglionic and non-ganglionic cells are scarce, the former more so than the latter. In still other grafts a few ganglionic cells are found in the midst of the medullary cords situated at the surface, few or no non-ganglionic cells being distinguishable. The scarcity of sympathetic cells in these cases lends support to the view that sympathetic cells transform into medullary cells. In grafts 182–16, 183–3, 201–1, and 201–2 the sympathetic cells are relatively more common than in most grafts. Each graft is from a Wolffian body isolated on the fourth day, except 182–16,

which is from an isolation on the fifth day. This is a somewhat puzzling situation, as, in general, more sympathetic cells might be expected from an isolation at 5 days than at 4 days. These cases are still more puzzling when it is noted that the suprarenal appears to have the usual number of medullary cells within its substance. It thus appears that delayed penetration and transformation do not adequately explain the relative abundance of sympathetic cells in these cases. Finally, it is to be noted that in some grafts the medullary cells are distinguished with difficulty from the non-ganglionic cells. This is due apparently to the lack of precise differential staining and possibly to their transitional character. Occasionally the non-ganglionic cells appear to extend into the suprarenal between the cortical cords, where they become continuous with the medullary cords.

3. GRAFTS OF THE CORTICAL RUDIMENT AFTER THE SECONDARY SYMPATHETIC NERVE TRUNKS ARE FORMED

a) Stage of development of the suprarenal primordia when grafted. —The isolation of the Wolffian body was made from donor embryos incubated 6, 7, 9, 10, 11, 12, and 13 days so as to include a series of stages after the secondary or definitive sympathetic nerve trunks begin to form. During these stages the suprarenal consists of a group of cortical cords, the cortical primordium, on the mediodorsal surface of which is a group of sympathetic cells. Such a topography is still found in a 16-day embryo (Rabl). According to Rabl (1891), Soulié (1903), and others, this group of sympathetic cells, especially during the eight and ninth days of incubation, constitutes the primordium of the medullary substance. Up to about the end of the sixth day it is composed largely, if not entirely, of cells originating in the primary sympathetic trunks. After the sixth day this group of primary sympathetic cells is apparently supplemented by cells contributed by the secondary or definitive sympathetic trunks. To make this clear a brief discussion of the development of the secondary sympathetic nerve trunks is necessary. About the sixth day, according to His, Jr. (1897), and Kuntz (1910, p. 285), the secondary sympathetic trunks begin to appear as a series of groups of neuroblasts situated just median to the ventral roots of the spinal nerves. About the same time, connections appear

at intervals between the primary and secondary sympathetic nerve trunks. The primary sympathetic trunk as such disappears, being incorporated in part at least, according to Abel (1912, p. 44) and Rau and Johnston (1923), in the secondary sympathetic chain of ganglia. In the paper of Rau and Johnston on the sparrow we read, on page 767: "The primary ganglionic swellings extend dorso-laterally. The free ends of these extensions enlarge and becoming separated from the primary ganglia give origin to the definitive sympathetic ganglia." These investigators emphasize that the primary sympathetic chains do not degenerate but migrate from the primary location; or, as they put it, "they may be considered to be wholly absorbed by the definitive sympathetic nervous system" (p. 767). By the eighth and ninth days the mass of sympathetic cells in contact with the mediodorsal surface of the anterior end of the cortical primordium has become quite large. It is connected with ganglia of the secondary sympathetic nerve trunks by nerve strands (the exact number has not been determined by me), along which are found sympathetic cells apparently migrating to the medullary primordium (Rabl, 1891, p. 509).

From the end of the sixth (Soulié) on to at least the sixteenth day (Rabl) the mass of sympathetic cells in contact with the cortical primordium shows two kinds of cells: large ganglion and small non-ganglionic cells. The non-ganglionic cells are regarded as "embryonic ganglionic cells" by Rabl and called "parasympathetic cells" by Soulié. The non-ganglionic cells appear to be more numerous next to the cortical primordium. These are cells which, according to descriptive embryology, penetrate between the cortical cords to become the medullary cords. According to Lillie (1919, p. 405), they are "characterized sharply by their large vesicular nuclei and granular contents" and are "precisely like the specific cells of the ganglion, perhaps a little smaller, and without axones."

The time of ingrowth of the sympathetic cells into the suprarenal varies according to the investigator. As noted above, Fusari (1892 and 1893) maintained that penetration occurs at 96 hours. According to Soulié, the small "parasympathetic cells" become insinuated between the cortical cords in a 200-hour embryo. Similarly, Lillie (1919, p. 405), states that beginning on the eighth day, strands of

sympathetic medullary cells may be traced into the superficial part of the suprarenal, and that by the eleventh day they have penetrated through a full third of the thickness of the suprarenal. According to Rabl (1891, p. 509), penetration is apparently still in progress in a 16-day embryo. Goormaghtigh (1921) described an ingrowth of chromaffin cells (of sclerotome origin) as beginning at 6 days and 9 hours.

The cortical primordium during the stages considered consists of a group of cortical cords lying in the mesenchyme between the anterior end of the Wolffian body and the dorsal aorta. The cortical substance first assumes the form of definite cords in an embryo of about 6 days' incubation (at 135 hours according to Soulié). At 7 days the cortical substance has definitely increased in amount, the individual cords being larger and closer together. From this time on until at least the eleventh day the cortical cords continue to increase in number. In an embryo incubated 8 days and 8 hours the cords have anastomosed with each other (Soulié, p. 274) and are separated by blood spaces: "separés par de minces cloisons conjonctives très riches en vaisseaux." By this time the cords are well developed. They are cylindrical in form, with radiating cells and nuclei basally situated.

b) *Description of the suprarenal obtained.*—Sixty-two grafts have been examined. Of these, eleven are derived from 6-day, one from 7-day, five from 9-day, four from 10-day, four from 11-day, twenty-five from 12-day, eleven from 13-day, and one from 14-day isolations of the Wolffian body. In twelve grafts no suprarenal is found. Of these, one (178–3) is from a 6-day, two (187–2 and 187–3) from a 10-day, one (189–1) from an 11-day, seven (188–4, 188–6, 188–8, 188–15, 190–3, 190–4, and 192–3) from a 12–day, and one (191–8) from a 13-day isolation of the Wolffian body. It is thus evident that the age or stage of development of the implant does not explain the absence of the suprarenal in these cases. Grafting conditions are suspected of causing the failure of the suprarenal to appear, since in some of these grafts implantation by the chorio-allantoic membrane has been faulty. In such cases the ectoderm is often interrupted so that the implanted tissue adheres to the shell membrane and consequently is poorly vascularized. An interesting cor-

relation between the failure of the suprarenal to develop and the laterality of the Wolffian body implanted is found. Of the failures, ten are right and only two are left Wolffian bodies. Of the right ones, six are female and four are male. This is in agreement with the principle that the right Wolffian body and its associated primordia tend, with a higher frequency when female, to have a lesser growth capacity than the left. The gonad is also absent in four of the grafts (178–3, 188–8, 191–8, and 192–3) where the suprarenal failed to develop; in all of these except 188–8 the metanephros is also absent and the Wolffian body is present. A gonad, a Wolffian body, and, with the exception of 188–4, 188–6, and 190–3, a metanephros are found in each of the remaining grafts lacking a suprarenal. In 190–4 the metanephros is very small.

In each of the remaining fifty grafts a suprarenal is found. In all of these, with the possible exception of 188–11 and 190–1, a Wolffian body is also found. The metanephros, on the other hand, is frequently absent. In twenty-eight grafts it is absent, and in 190–1 its presence is doubtful. The significance of these findings with respect to the metanephros will be discussed in a subsequent paper. A gonad is always found except in 190–1 and 193–4. It is a testis, a right or a left ovary. For graft 190–1 it should be noted that the host embryo was recorded in my notes as "dying."

In the majority of cases the suprarenal formed in the graft is a rather large body of more or less uniform size. In nine exceptional cases (182–10, 186–4, 188–5, 188–11, 188–12, 190–2, 191–7, 193–2, and 194–4) the suprarenal formed is definitely smaller than typical. In most of these grafts with small suprarenals there is some evidence of faulty implantation by the chorio-allantoic membrane. However, the laterality of the suprarenal may also be significant in explaining the lack of growth, since in two-thirds of these grafts the right is small whereas in the remainder (186–4, 188–12, and 190–2) the left is small. In each of the grafts with a small right suprarenal, except 191–7, which has a testis, a right ovary is associated. Of the left suprarenals two are associated with a testis and one (190–2) with a left ovary. These data suggest that there is a greater tendency for the right than the left suprarenal to be small.

The suprarenal developed from an isolation of the Wolffian body

made at various stages after the formation of the secondary sympathetic nerve trunks does not differ essentially from one formed from an isolation made before their appearance on the sixth day. In most cases (except 191–1 and 194–8) it is a definitely circumscribed, more or less elongate, body. It is usually contiguous with the mesonephros. As in the normal of a corresponding age, no very definite capsule of connective tissue is formed about the suprarenal of the graft. In a few cases, as for instance in 188–10, the connective tissue about the suprarenal is sufficiently condensed to resemble a capsule. More frequently the condensation of the connective tissue occurs only part way around the suprarenal, the remainder of its surface being directly continuous with the mesenchyme of the chorio-allantoic membrane.

The bulk of the suprarenal consists of a network of cortical cords. Between the cortical cords are found the medullary cells or cords and blood vessels. In the great majority of cases the central area of the suprarenal is distinctly sinusoidal, while the surrounding portions form a compact zone. In exceptional cases, as in 178–2 (6-day isolation), the suprarenal is more or less sinusoidal throughout. More or less typically a comparatively large blood vessel enters the suprarenal at one side, giving this region the general appearance of a hilum. This blood vessel may be traced from the allantoic vessels directly to the central sinusoids. It may branch into two or three vessels before entering the substance of the suprarenal.

Histologically, the cortical and medullary cords are clearly differentiated by their differences in staining reaction and structure, and thus do not differ essentially from those in the grafts from isolations made before the sixth day. The cortical cords still exhibit growth, even in the grafts obtained from 14-day isolations, as mitotic figures are somewhat common. Mitotic figures in the medullary cords, on the other hand, have not been found. It is possible that a dividing medullary cell might be difficult to distinguish from a cortical cell, and thus overlooked.

The number and distribution of the medullary cords vary somewhat in the different suprarenals. In fact, scarcely any two suprarenals are exactly alike with respect to these features, making general-

izations difficult. Considering the grafts as a group, however, it is possible to recognize two types of suprarenals. In the majority of grafts the medullary cords do not occur in large or conspicuous aggregations situated at the surface or within, but are more or less uniformly distributed among the cortical cords throughout the suprarenal. In these the number of medullary cords varies more or less in the different grafts; in five exceptional grafts (186–4, 188–2, 192–2, 194–7, and 194–8) they are unusually abundant.

In the second type of suprarenal the medullary cords are definitely more abundant in some regions than in orders. They may be quite common about the entire surface, but more frequently they occur in the form of rather large localized areas at the surface. Such collections are more frequent at one end and side, which is also the position of masses of sympathetic cells to be described below. Reasoning from similar relationships in the normal suprarenal, this is presumably the anterodorsal surface of the adrenal. In extreme cases the medullary cords may form as much as one-third of the entire suprarenal (188–2).

Sympathetic cells of two kinds, ganglionic and non-ganglionic, are found contiguous with the surface of the suprarenal in all grafts. Their structural characteristics have been described above. They commonly appear together in the form of irregular masses or groups of variable size. Either type of cell may be the more common in the masses; or pure groups of either ganglion or non-ganglionic cells may be found. Somewhat typically they are found only at one end and side, the rest of the surface of the suprarenal being relatively free of them. Their position presumably corresponds to the mediodorsal surface of the normal suprarenal. Much less commonly they appear more or less scattered about the entire surface. In two exceptional cases (188–1 and 190–7) a mass of sympathetic cells is found within the substance of the suprarenal. In 188–1 they have apparently entered with the blood vessel at the hilus.

The number of these sympathetic cells varies considerably in the different grafts. In general, however, they are distinctly more common than in the grafts obtained from isolations made before the sixth day, i.e., before the appearance of the secondary sympathetic nerve trunks. In five grafts (178–4, 182–4, 188–9, 190–2, and

190–6) they are very few. Their scarcity does not seem to be correlated with the time of isolation of the Wolffian body (age of the donor), for these are from both 6- and 12-day embryos. At the opposite extreme may be found relatively enormous masses of the sympathetic cells. This wide variation in the number of sympathetic cells may be regarded as an expression of a greater or less amount of the sympathetic ganglion, i.e., the so-called "medullary primordium," having been included with the transplanted mesonephros. In making the isolations, no very especial care was taken to include the sympathetic ganglion, as at that time I was concerned chiefly with the complete isolation of the gonad.

The sympathetic cells typically occur in conjunction with medullary cells and cords. This association of all three types of cells is especially noticeable in 182–2, 182–4, 182–10, 182–14, and 190–7. Typically, the sympathetic cells are in contact with the medullary cells or cords and never found, with one possible exception (190–4 where the adrenal is a trace), in contact with cortical cords. If the masses of sympathetic cells occur either at some distance from the surface or in the vicinity but not in contact with the suprarenal, as is the situation in several grafts (see 186–4, 188–5, 191–3, and 194–7), no medullary cells or cords are found in conjuncton. This indicates that medullary cords are formed only when the sympathetic cells are in very close proximity to, or in contact with, the suprarenal.

DISCUSSION

The results of the experiments described in this paper give definite evidence as to the time of origin of the suprarenal and its capacity for self-differentiation. As early as 96 hours the cells which are essential to its formation are proved to be already localized in the Wolffian body. The cells at this stage, as well as later, have the capacity to differentiate into a suprarenal independent of the rest of the embryo with the possible exception of the mesonephros and gonad.

The kinds of cells described by embryologists (Soulié, 1903; Goormaghtigh, 1921) as being present at this time in the anterior end of the mesonephros are: (1) cells derived from the medioventral coelomic epithelium over the anterior end of the Wolffian body, (2)

cells from the sympathetic nerve trunks, and (3) mesenchyme cells. There is general agreement among all recent investigators that the cortical cords are derived from the coelomic epithelium of the Wolffian body, but opinion differs as to the origin of the medullary cords. According to the majority of investigators (see Fusari, 1893, Soulié, 1903, Rau and Johnston, 1923), they arise from cells coming from the sympathetic nerve trunks. However, as recently as 1921 Goormaghtigh reported that the chromaffin cells are of mesodermal (sclerotome) origin, though he retracted this in 1924.

The data of this paper are suggestive but do not solve the problem as to the exact origin of the chromaffin cells of the medullary cords. So far as the possibilities are concerned, these may be derived from mesenchymal, cortical, or sympathetic cells. Little or no evidence is obtained from the grafts to support their origin from any cells except the sympathetic. Their origin from these is indicated (1) by the formation of a histologically complete suprarenal from an implant of a Wolffian body of a 4-day embryo, when sympathetic cells are first in juxtaposition to cortical primordium; (2) by the close and perhaps causal association of the sympathetic and medullary cells at the surface of the suprarenal undergoing differentiation in the grafts; and (3) by the scarcity of sympathetic cells in a number of grafts obtained from isolations of the Wolffian body from 4- and 5-day embryos, suggesting a rather complete transformation of sympathetic cells into chromaffin cells.

The sympathetic cells in contact with the cortical rudiment, and thus suspected of transforming into chromaffin cells of the medullary cords, are of two kinds: ganglionic and non-ganglionic. The latter type may be identical with the "parasympathetic cell" of Soulié, the "*embryonale Ganglienzelle*" of Rabl, or it may be an "indifferent cell" in the sense of Schaper (1897). Most investigators agree that this cell is of nervous rather than mesodermal origin. Neither cell has been seen to transform by intermediate stages into medullary cells in the grafts; and, so far as I am aware, no investigator has described such stages in the normal suprarenal. No special study of this has been made in these grafts. Certain facts suggest, however, that non-ganglionic rather than the ganglionic cells give rise to the chromaffin cells. The chromaffin cells resemble more

closely the non-ganglionic cells. Their nuclei are similar in size and structure. The one essential difference is that the chromaffin cell has more cytoplasm in which many granules have accumulated. The non-ganglionic cells are more numerous than the ganglionic cells next to the group of cortical cords; and in one case they appear to extend into the suprarenal between the cortical cords, where they become continuous with chromaffin cells. To determine whether sympathetic cells are essential to the formation of, or actually give rise to, the medullary cords, a crucial experiment is suggested. This consists of isolating and transplanting the mesonephros before any sympathetic cells have migrated to the cortical primordium, i.e., before the primary sympathetic nerve trunks develop.

That the laterality of the suprarenal is determined at an early stage is indicated by the differences in the growth capacities of the right and left primordia. The evidence, however, is more complete on the later stages. Of the total number of small suprarenals found, seven are right and three left. Furthermore, of the grafts in which the suprarenal failed to develop eleven are from right and two from left Wolffian bodies. This may be another expression of lateral differences in growth capacities. These results are in general agreement with the findings of Goormaghtigh (1921, p. 106) for the nor[illegible]ortical primordium, where the right is slightly smaller than the left. It is interesting to note that of the small suprarenals the right one is more frequently small when associated with a right ovary (six cases) than with a right testis (three cases). It has been shown previously that the gonad at this early stage is determined also as to laterality, the right ovary in particular having a diminished growth capacity (Willier, 1927). It is, however, somewhat surprising to find that the right suprarenal of the female tends also to have the least capacity for growth.

The present experiments aid us definitely in analyzing (1) whether the primary or the secondary sympathetic nerve trunks furnish the potential medullary cells, and (2) the problem as to the time and manner of penetration of the sympathetic cells among the cortical cords. Concerning the first problem it is clear that only the primary sympathetic cells may be suspected of transforming into medullary cells and cords, since a suprarenal forms in the graft from

a Wolffian body isolated from a 4-day embryo, 2 days before the secondary sympathetic nerve trunks begin to form. The secondary sympathetic is thus shown not to be essential to the formation of medullary cords. Furthermore, the primary contribution is not responsible for innervation only, as has been suggested (see Poll, 1906), but for the medullary cords as well. In this connection the work of Goormaghtigh (1921) is interesting. He described both nerve and chromaffin cells in contact with the cortical primordium at an early stage. The nerve cells penetrate among the cortical cords as early as 4 days and 16 hours, but the potential chromaffin cells do not penetrate until nearly 2 days later. These findings of Goormaghtigh are in general agreement with the view, discussed below, that, although the potential medullary cells are in position early, they do not penetrate among the cortical cords until a later stage.

Although the secondary sympathetic has been shown not to be essential for the formation of medullary cords, it may contribute indirectly to their formation. This is indicated in the first place by the occurrence, in the normal embryo of 8 days, of cells along the sympathetic nerves connecting secondary sympathetic ganglia with the ganglionic mass in contact with the cortical cords. Such cells thus may migrate to the site of the suprarenal supplementing those originally contributed by the primary sympathetic. Secondly, the greater number of sympathetic cells at the surface of the suprarenal in grafts from isolations made after rather than before the sixth day may also furnish evidence for such a contribution. It has not yet been established that the medullary cords are more numerous in the grafts from isolations made after the sixth day.

With respect to the time and manner of penetration of the medullary cells into the suprarenal there are two views. According to Fusari (1893), the two primordia are in contact as early as 90 hours, and by the end of the fourth day some of the sympathetic cells have penetrated among the cortical rudiments. On the other hand, Rabl (1891), Soulié (1903), and Lillie (1919) find that both primordia are associated for a considerable length of time before any cells separate from the sympathetic ganglionic mass and penetrate as medullary cells into the periphery of the cortical primordium. More specifical-

ly, sympathetic cells are contiguous with the cortical primordium by the end of the fourth day (Rabl), or 96 hours (Soulié). By the end of the sixth day and for at least 3 succeeding days these cells form a distinct ganglionic mass on the mediodorsal face of the group of cortical cords. This is the so-called "primordium" of the medullary cells. From this large ganglionic mass sympathetic medullary cells penetrate, beginning on or about the eighth day, into the adjacent mass of cortical cords. For further details concerning the process of penetration see p. 210.

Upon first analysis the experiments seem to prove the correctness of Fusari's contention that the potential medullary cells have already penetrated between the cortical cords at 4 days. In other words, penetration is not delayed until about the eighth day. This seems to suggest that the accumulation of the sympathetic cells into a large mass contiguous with the cortical primordium preparatory to penetration is not essential. In support of this a number of grafts of the Wolffian body isolated at 4 days are found in which the number of sympathetic cells is exceedingly scarce and the medullary cells are uniformly distributed. Granting that this is true, then what is the significance of penetration of the medullary cells on or about the eighth day in the normal as outlined above? Does it mean that there is a primary contribution at 4 days and a secondary one on or about the eighth day? A more careful analysis of the grafts suggests a different interpretation, namely, that there is also a delayed penetration and formation of the medullary cells in the grafts. In other words, in a graft of the Wolffian body from a 4-day embryo the primary sympathetic cells contiguous with the cortical primordium multiply, forming a ganglionic mass of considerable size before any cells actually penetrate between the cortical cords. The place of formation and the manner of penetration of the sympathetic medullary cells in the graft thus simulates the development of these cells in the normal suprarenal. In support of this interpretation we have found in the grafts obtained from Wolffian bodies of 4- and 5-day embryos that (1) the sympathetic cells occur in groups only at the surface of the suprarenal, (2) the medullary cells as a rule are more common at the surface than within the substance of the suprarenal,

and (3) penetration of the medullary cells from a mass of sympathetic cells at the surface is apparently actually in progress in a few grafts. This is particularly well shown in Figure 2.

Another interpretation, for which there is little evidence, is that there is a continuous penetration beginning on or about the sixth day (Goormaghtigh) and continuing for an undetermined time. It is still evident in a 16-day embryo, according to Rabl. According to Wiesel (1902), the immigration of sympathetic cells continues until at least the tenth year in the human.

It is thus seen that the problem of the manner of formation of the medullary cords is not definitely solved by the grafts of the present report. The youngest suprarenal obtained has a total age (donor age plus time on host) of 13 days. Certain critical stages in the development of the suprarenal in the graft to correspond to the time of penetration in the normal are needed. At my suggestion, Mr. F. R. Kille, is now making a study of the manner of the formation of medullary cords, with particular reference to whether the sympathetic cells present at 4 days form a ganglionic mass prior to penetration and differentiation into medullary cells.

It is important from the standpoint of developmental mechanics to examine (1) the possible factors determining the migration of sympathetic cells to the site of the cortical rudiments, and (2) the relations necessary for the transformation of sympathetic cells into medullary cells, including the significance of penetration. Concerning the first of these problems, little is known save that migration does occur and that the cortical primordium arises first. According to Soulié, the cortical primordium arises at 78 hours, nearly a day before the sympathetic cells are found in contact with it (at 96 hours). This suggests that the cortical primordium may determine the course of migration of the sympathetic cells to the suprarenal zone of the mesonephros. An analysis of this appears possible by chorio-allantoic grafting.

Granting the sympathetic origin of the medullary cells, under what conditions or stimuli do sympathetic cells transform into medullary cells? Certain relations are indicative. In the grafts medullary cells are found between the cortical cords and in association

with the sympathetic cells which are contiguous with the surface of the suprarenal, and never in any groups of sympathetic cells which are not in contact with or in very close proximity to the suprarenal. Furthermore, the sympathetic cells are not found in contact with the cortical cords, but only with medullary cords and connective tissue. These relationships are regarded as not being merely incidental but as suggesting that the differentiation of the sympathetic cells into medullary or chromaffin cells is dependent upon the suprarenal body itself, presumably its cortical cords. This opens up an interesting problem concerning the differentiation of chromaffin cells in the absence of cortical cords, which commonly occurs elsewhere in the body of the embryo.

The general significance of the apparent formation of the chromaffin cells at or near the surface as described for the normal suprarenal is evident from the foregoing analysis. It is only when the sympathetic cells are subject to some influence from the suprarenal body that they transform. However, the delayed formation and penetration of the chromaffin cells is somewhat puzzling. Should it become established in the development of the suprarenal of the graft that the mass of sympathetic cells must remain in contact with the cortical cords for a considerable length of time before any of them penetrate as chromaffin cells, we have a very interesting and curious phenomenon for analysis.

Finally, there remains for examination the problem as to whether or not the cortical cords will differentiate independently of the sympathetic cells.

SUMMARY

1. This report deals with an experimental study of (*a*) the time of origin of the potential suprarenal cells and (*b*) the relationship of sympathetic nerve cells to the differentiation of the suprarenal components, especially of the medullary or chromaffin cells.

2. The method of chorio-allantoic grafting was used. The Wolffian body bearing the primordia of the suprarenal and gonad was isolated, in most cases throughout its length, and transplanted to the chorio-allantoic membrane of a host chick embryo incubated 9 days. It remained as a graft on the host embryo for 8 or 9 days.

3. The isolation of the Wolffian body was made with reference to the time that each of the two sympathetic trunks, which are characteristics of bird embryos, arises. Twenty-six grafts were obtained by implanting the Wolffian body from embryos incubated 4 or 5 days, when the cortical rudiment and cells from the primary sympathetic nerve trunks are in contact, and sixty-four grafts from Wolffian bodies taken from embryos ranging in age from 6 to 14 days, thereby including a series of stages after the secondary sympathetic nerve trunks begin to form.

4. Regardless of the time of isolation, a suprarenal was formed in the majority of grafts. Typically it is a definitely circumscribed organ with well-differentiated cortical and medullary cords irregularly intermingled as in the normal. In thirteen grafts no suprarenal was found, twelve of these being from isolations of the Wolffian body made after the sixth day.

5. The cells essential for suprarenal formation are already segregated and localized in the Wolffian body as early as 96 hours.

These cells have the capacity for differentiation into the suprarenal independent of the rest of the embryo, with the possible exception of the mesonephros and gonad.

That the laterality of the suprarenal is determined is suggested by (1) the right suprarenal of the graft being more frequently of smaller size than the left, and (2) the more frequent failure of the right than the left suprarenal to develop in the graft.

6. Since a suprarenal forms in a graft of a Wolffian body isolated from a 4-day embryo, 2 days before the secondary sympathetic nerve trunks begin to develop, only the primary sympathetic cells may be suspected of transforming into the medullary cells.

The secondary sympathetic is thus shown not to be essential to the formation of medullary cells. However, it may contribute indirectly to their formation. This is evidenced by (*a*) the presence in the normal embryo of about 8 days' incubation of sympathetic cells along the nerves connecting the secondary sympathetic ganglia and the ganglionic mass in contact with the cortical cords and (*b*) a greater number of sympathetic cells intimately associated with medullary cells at the surface of the suprarenal in grafts from isola-

tions made after than before the secondary sympathetic trunks begin to develop, i.e., after the sixth day.

7. The origin of the chromaffin cells from the sympathetic cells is suggested by (1) the formation of a histologically normal suprarenal from an implant of a Wolffian body of a 4-day embryo, the stage when sympathetic cells *first* come into contact with the cortical primordium; (2) the scarcity of sympathetic cells in a number of such grafts (including those from 5-day isolations), indicating a rather complete transformation of the sympathetic cells into chromaffin cells; and (3) the intimate association of sympathetic and medullary cells at the surface of the suprarenal undergoing differentiation in the graft.

The chromaffin cell is probably derived from the non-ganglionic cell rather than the ganglionic cell, as is evidenced by (1) its closer resemblance to the non-ganglionic cell in structure and (2) the fact that the non-ganglionic cells occur in greater abundance next the cortical cords, the apparent locus of chromaffin-cell differentiation.

The differentiation of sympathetic cells into medullary cells appears to be dependent on some influence from the suprarenal body itself, presumably its cortical cords. This is indicated by the fact that masses of sympathetic cells not in contact or in close proximity to the suprarenal fail to differentiate any medullary cells.

8. Concerning the time and manner of penetration of the sympathetic medullary cells between the cortical cords, the evidence from the grafts is conflicting:

a) First, in a number of grafts of the Wolffian body isolated at 4 days, the sympathetic cells are exceedingly scarce and the medullary cells are uniformly distributed. This seems to agree with Fusari's view that the potential medullary cells have already penetrated between the cortical cords at 4 days.

b) A second and more probable interpretation is that there is a delayed penetration and formation of the medullary cells in the graft; that is, in a graft of the Wolffian body from a 4-day embryo, the primary sympathetic cells contiguous with the cortical primordium multiply to form a mass before any cells separate and penetrate as medullary cells between the cortical cords. This is sup-

ported by the grafts obtained from Wolffian bodies of 4- and 5-day embryos as follows: (1) the sympathetic cells occur in groups only at the surface of the suprarenal; (2) the medullary cells, as a rule, are more common at the surface than within, and (3) penetration of the medullary cells from a mass of sympathetic cells at the surface of the suprarenal is apparently actually in progress in a few instances.

9. A number of problems in connection with the developmental physiology of the suprarenal are recognized and briefly discussed.

LITERATURE CITED

ABEL W. 1912. Further observations on the development of the sympathetic nervous system in the chick. Jour. Anat. and Physiol. XLVII, 35.

FUSARI, R. 1892. Contribuzione allo studio dello sviluppo delle capsule surrenali e del simpatico nel pollo e nei mammiferi. Arch. Sci. Med., XVI, 249.

———. 1893. Contribution à l'étude du développement des capsules surrénales et du sympathique chez le poulet et les mammifères. Arch. Ital. de Biol., XVIII, 161.

GOORMAGHTIGH, N. 1921. Organogenèse et histogenèse de capsule surrénale et du plexus cœliaque. Arch. de Biol., XXX, 83.

———. 1924. L'origine du système nerveux sympathique des oiseaux. C. R. Ass. Anat., 19e Réunion, Strasbourg, p. 149.

HARRIS, H. A. 1928. Observations on the origin of the adrenal glands in the chick. Master's thesis, University of Chicago.

HIS, W., Jr. 1897. Über die Entwickelung des Bauchsympathicus beim Hühnchen und Menschen. Arch. f. Anat. u. Entw., Suppl. Bd. 137.

KUNTZ, A. 1910. The development of the sympathetic nervous system in birds. Jour. Comp. Neur., XX, 283.

LILLIE, FRANK R. 1919. The development of the chick (2d ed). New York: Henry Holt & Co.

POLL, H. 1906. Die Entwickelung der Nebennierensysteme. Hertwigs Handbuch der vergl. u. exper. Entw.-lehre der Wirbeltiere, III, Teil 1, 443.

RABL, H. 1891. Die Entwickelung und Structur der Nebennieren bei den Vögeln. Arch. mikr. Anat., XXXVIII, 492.

RAU, S. A., and JOHNSTON, P. H. 1923. Observations on the development of the sympathetic system and the suprarenal glands in the sparrow. Proc. Zoöl. Soc. London, p. 741.

SCHAPER, A. 1897. Die frühesten Differenzirungsvorgänge im Centralnervensystem. Arch. f. Entw.-mech., V, 81.

SOULIÉ, E. H. 1903. Recherches sur le développement des capsules surrénales chez les vertébrés supérieurs. Jour. de l'Anat. et Physiol., XXXIX, 197.

WIESEL, J. 1902. Beiträge zur Anatomie und Entwickelung der menschlichen Nebenniere. Anat. Hefte, XIX, 481.

WILLIER, B. H. 1924. The endocrine glands and the development of the chick. I. The effects of thyroid grafts. Amer. Jour. Anat., XXXIII, 67.

———. 1927. The specificity of sex, of organization and of differentiation of embryonic chick gonads as shown by grafting experiments. Jour. Exp. Zoöl., XLVI, 409.

———. 1928. An experimental study of the origin of the adrenal gland in the chick embryo. Anat. Rec., XLI, 73.

———. 1929. Origin of the adrenal gland, with reference to its sympathetic nerve components in the chick embryo as shown by chorio-allantoic grafts. *Ibid.*, XLII, 42.

THE EXCITABILITY OF OPTIMUM MOTOR POINTS LOCATED ON THE DORSAL AND VENTRAL SIDES OF THE SPINAL CORD OF THE SMOOTH DOGFISH (GALEUS CANIS MITCHILL)

ATTILIO RIZZOLO
United States Bureau of Fisheries, Woods Hole

OUR study concerns a comparison of the excitability of motor points located on the dorsal side of the spinal cord with the excitability of motor points located on the ventral side of the cord. Three experiments have been undertaken. In the first experiment, measurements of excitability were made from motor points located on the dorsal side of the cord; in the second experiment the measurements were made from motor points located on both sides of the cord. The experiments have been executed on the selachian (*Galeus canis*), the animal varying from 50 cm. to 75 cm. in length.

The animals were operated and experimented upon while their heads and gills remained submerged in sea water. Each animal was fastened to a cork board tilted at an angle of 45° in a large dissecting pan. The pan was provided with a continuous flow of sea water. Local or general anesthesia was not employed.

On the dorsal side, the spinal cord was exposed immediately anterior to the pectoral girdle, immediately anterior to the anterior dorsal fin, midway between the anterior dorsal fin and pelvic girdle, and immediately anterior to the posterior dorsal fin. On the ventral side, the cord was exposed immediately posterior to the pectoral girdle, immediately anterior to the pelvic girdle, and immediately anterior to the anal fin.

In each region exposed, motor points were located determining the movement of the same fin. The excitability of each motor point was determined. The motor point having the greatest excitability was thus located. We designated this motor point as the "optimum" motor point. We have limited the comparison of the respective excitability of motor points to the optimum motor points.

According to the region exposed, the movements of the following fins were taken as indexes of response to measurements of excitability.

DORSAL SIDE OF SPINAL CORD

Pectoral fins for motor points located in the region immediately anterior to the pectoral girdle.

Anterior dorsal fin for motor points located in the region immediately anterior to the fin.

Pelvic fins for motor points located in the region midway between the anterior dorsal fin and pelvic girdle.

Posterior dorsal fin for motor points located in the region immediately anterior to the dorsal fin.

VENTRAL SIDE OF SPINAL CORD

Pectoral fins for motor points located in the region immediately posterior to the pectoral girdle.

Pelvic fins for motor points located in the region immediately anterior to the pelvic girdle.

Anal fin for motor points located in the region immediately anterior to the fin.

Measurements of excitability have been made in function of time according to the method of the "chronaxie" devised by Professor Louis Lapicque. Employment of Lapicque's electrical rheotome, the "chronaxiemetre," permitted the measurements to be made with rectangular waves. As active electrode, Lapicque's modification of D'Arsonval's non-polarizable electrode was used; as diffuse electrode, a silver wire was used. The diffuse electrode was plunged into muscular tissue; the active electrode was held locally and intermittently by hand on a motor point whose chronaxie was being determined. Measurements of the chronaxie were made in thousandths ($\frac{1}{1000}$) of a second (sigma).

Eight animals were operated upon for comparing the chronaxies of optimum motor points located on the dorsal side of the spinal cord; six animals were operated upon for comparing the chronaxies of the optimum motor points located on the ventral side of the cord. In each animal of the first series, all the dorsal regions indicated above were exposed; in each animal of the second series, all the ventral regions were exposed. For each animal of the first series, the values of the chronaxie for the optimum motor points located on

the dorsal side of the spinal cord were constant within a range of variation of 0.1 σ–0.3 σ. For each animal of the second series, the values of the chronaxie for the optimum motor points located on the ventral side of the spinal cord were similarly constant. In each series the value of the chronaxie for all animals considered as a group varied from 0.1 σ–0.3 σ. We report a case from each series (see Tables I and II).

TABLE I

MEASUREMENTS OF THE CHRONAXIE FROM MOTOR POINTS LOCATED ON THE DORSAL SIDE OF THE SPINAL CORD

(Chronaxie in 1/1,000 of a second)

Galeus canis 2

Region immediately anterior to the pectoral girdle

Optimum motor point response—left pectoral fin

Rheobase (Volts)	Chronaxie (σ)
4.0	0.1
5.0	0.1
3.4	0.1
4.2	0.1

Region immediately anterior to the anterior dorsal fin

Optimum motor point response—anterior dorsal fin

Rheobase (Volts)	Chronaxie (σ)
3.4	0.1
2.6	0.1
4.2	0.1
4.0	0.1

Region midway between the anterior dorsal fin and pelvic girdle

Optimum motor point response—right pelvic fin

Rheobase (Volts)	Chronaxie (σ)
3.8	0.1
3.8	0.1
4.6	0.1
3.8	0.1

Region immediately anterior to the posterior dorsal fin

Optimum motor point response—posterior dorsal fin

Rheobase (Volts)	Chronaxie (σ)
3.6	0.1
3.4	0.1
3.8	0.1
3.8	0.1

Sixteen animals were operated upon for comparing the chronaxies of the optimum motor points located on the dorsal side of the spinal cord with the chronaxies of the optimum motor points located on the ventral side. The animals were operated in four groups, four animals comprising each group. According to group, the following regions of the cord were exposed in each animal:

GROUP I

Dorsal side of spinal cord

Region immediately anterior to the pectoral girdle

Ventral side of spinal cord

Region immediately anterior to the pelvic girdle and region immediately anterior to the anal fin

GROUP II

Dorsal side of spinal cord

Region immediately anterior to the posterior dorsal fin

Ventral side of spinal cord

Region immediately posterior to the pectoral girdle and region immediately anterior to the pelvic girdle

GROUP III

Dorsal side of spinal cord

Region immediately anterior to the anterior dorsal fin and region midway between the anterior dorsal fin and the pelvic girdle

Ventral side of spinal cord

Region immediately anterior to the anal fin

GROUP IV

Dorsal side of spinal cord

Region immediately anterior to the anterior dorsal fin and region midway between the anterior dorsal fin and the pelvic girdle

Ventral side of spinal cord

Region immediately posterior to the pectoral girdle

TABLE II

MEASUREMENTS OF THE CHRONAXIE FROM MOTOR POINTS LOCATED ON THE VENTRAL SIDE OF THE SPINAL CORD

(Chronaxie in 1/1,000 of a second)

Galeus canis 4

Region immediately posterior to the pectoral girdle

Optimum motor point response—right pectoral fin

Rheobase (Volts)	Chronaxie (σ)
3.6	0.3
3.4	0.3
3.4	0.3
3.4	0.3

Region immediately anterior to the pelvic girdle

Optimum motor point response—left pectoral fin

Rheobase (Volts)	Chronaxie (σ)
3.0	0.3
3.2	0.3
4.0	0.3
4.2	0.3

Region immediately anterior to the anal fin

Optimum motor point response—anal fin

Rheobase (Volts)	Chronaxie (σ)
4.0	0.3
3.0	0.3
3.6	0.3
3.4	0.3

In each animal of each group the optimum motor points located in the exposed regions of the dorsal and ventral sides of the spinal cord measured the same chronaxie. The value of the chronaxie for all sixteen animals considered as a group varied from 0.1 σ–0.3 σ.

CONCLUSIONS

1. The optimum motor points located in different regions of the dorsal side of the spinal cord and determining the movements of the right or left pectoral fin, the anterior dorsal fin, the right or left pelvic fin, and the posterior dorsal fin have the same chronaxie.

2. The optimum motor points located in different regions of the ventral side of cord and determining the movements of the right or left pectoral fin, the right or left pelvic fin, and the anal fin have also the same chronaxie.

3. In each animal the chronaxie of the former motor points is the same as the chronaxie of the latter motor points; i.e., the optimum motor points located on the dorsal side of the cord have the same chronaxie as the optimum motor points located on the ventral side.

LITERATURE CITED

CARDOT, H., and VARE, P. 1928. Quelques données sur l'excitabilité des centres et l'excitabilité reflexe des poissons osseux. C. R. Soc. Biol., XCVIII, 693.

RIZZOLO, A. 1927. Chronaxie de la moelle épinère avant et après section complète de la moelle. *Ibid.*, XCVII, 1071.

AN EXPERIMENTAL STUDY OF OVARIECTOMY AND TRANSPLANTATION IN THE PREGNANT ALBINO RAT[1]

(One plate)

W. O. NELSON AND H. O. HATERIUS
Zoölogical Laboratory, State University of Iowa

IN SPITE of the great deal of experimental work which has been carried out on the subject, the exact degree to which the corpora lutea are necessary for the maintenance of pregnancy has been a matter of dispute. That they are essential during the early stages of gestation up to the time of implantation of the embryos is generally admitted. Authors, however, are not agreed as to how long the corpora are subsequently required. Born first suggested a possible relationship between the corpus luteum and the nutrition of the embryo, and at his instigation Fraenkel (1903) removed the corpora lutea from the ovaries of pregnant rabbits at various stages of gestation. His results led him to the conclusion that they were necessary only during the first half of the term. Marshall and Jolly (1908) for the dog and rat, Kleinhaus and Schenk (1907) and Daels (1908) for the rabbit, guinea pig, and rat, came to the same conclusion. Clinical cases reported by Bell (1920) and Essen-Moller (1904) suggested that in the human subject the removal of the corpus luteum of pregnancy during the later stages has no adverse effects.

These early results, however, have been offset by more recent findings. Hammond (1927) and Weymeersch (1907) have reported that removal of the ovaries during pregnancy in the rabbit is inevitably followed by resorption or abortion. Similar results have been described for the goat (Drummond-Robinson and Asdell, 1926), the opossum (Hartman, 1925), and the spermophile (Drips, 1919). Further evidence may be drawn from pathological cases in which, for one reason or the other, the corpus luteum undergoes degenera-

[1] The expenses for this investigation were defrayed by a grant from the National Research Council Committee on Research in Problems of Sex.

tion during pregnancy. Hammond (1927) and Hartman (1925) have shown that fetal death normally follows such degeneration. Parkes (1928*a*) has reported that the corpus luteum is essential in all stages of pregnancy in the mouse. Similar results have been obtained by Harris (1927) in the same animal.

Herrick (1928) has recently reported that bilateral extirpation of the ovaries in guinea pigs causes abortion in the greater number of cases, but that in some instances pregnancy may continue to term even though the ovaries are removed before the middle of the gestational period. He carried the work a step farther and introduced transplantation as a method of control. Employing ovaries from virgin females, implants were made upon the sites of the extirpated ovaries, and it was found that in most cases the period of gestation was uninterrupted. He concluded, in view of the employment in his transplantations of virgin ovaries in which there could be no corpora lutea of pregnancy, that the active substance in the ovary responsible for the maintenance is not confined to the corpus luteum.

It was thought advisable to carry Herrick's work a step farther, that is, through recovering grafted ovaries and making a study of them to discover what effect the period spent in the body of the pregnant animal had produced in their histological picture. In the work under consideration not only were virgin ovaries employed, some of which patently would have corpora lutea of ovulation, but also immature ovaries, which could have no lutein tissue whatever.

TECHNICAL PROCEDURE

The animals employed in this work were albino rats, only healthy virgin females in full reproductive vigor being used as experimental animals. The immature females used as donors were of known age and were controlled by litter-mate sisters. The procedure employed for any given animal was initiated by unilateral ovariectomy, following which operation the animal was allowed several days for recovery. She was then allowed to become pregnant, pregnancy being calculated from the appearance of the vaginal plug.

Transplantation of a foreign ovary was made on the ninth, tenth, twelfth, or thirteenth day of gestation. The operation of transfer-

ring the graft required two workers and consisted in the preparation of a special pocket in the abdominal muscles of the recipient by one operator while the second was removing an ovary from the donor and trimming away tissue and fat surrounding it. The grafts, except when immature ovaries were employed, were cut in two in order to facilitate vascularization. The prepared tissue was placed in the pocket, and the pocket closed by suturing. Separate stitches were taken for the muscle and skin incisions, fine silk suture thread being used. It was found that extremely sterile precautions were essential in the grafting operation in order to prevent the formation of pus pockets about the site of the implant. In the simple ovariectomy operations semisterile precautions were sufficient.

The host's second ovary was removed either within 24 hours of the time of transplantation or after a period of 4 days.

The animals so treated were isolated and were closely observed during the subsequent days. If abortion occurred, the graft was immediately recovered and fixed. If the animal carried through to term, the graft was recovered immediately before or after parturition. All tissue was fixed in Bouin's and stained in Delafield's haematoxylin and Congo red.

As a control, a series of animals was kept, treated in every way as the experimental ones, except that no graft was made. Other control measures, applying to individual cases, consisted in the sectioning of the donor's second ovary and the comparison of its histological picture with that of the recovered graft.

EXPERIMENTAL

The first series of animals (nineteen in number) was implanted with ovaries taken from donors in various stages of the oestrous cycle, and in all cases the second ovary was removed within 24 hours following implantation of the graft. The results varied in so far as the further duration of pregnancy was concerned, and apparently can be correlated with the stage of the donor's oestrous cycle at the time of transplantation. Table I gives a detailed account of the conditions and results pertaining to each case.

It will be noted that a pronounced difference existed in the fates of the fetuses, according to the type of graft employed. If the grafted

ovary was in a condition of pro-oestrus at the time of transplantation, the host aborted about 3 days later. If, however, an ovary of dioestrus had been transplanted, most of the mothers carried through to approximately their normal term. The young, however, were not viable, since they either were stillborn or died shortly after birth—which occurred within 12 hours of the normal time for the colony employed.

TABLE I

RESULTS OF IMPLANTATIONS OF OVARIES IN VARIOUS CYCLIC CONDITIONS

Rat No.	Type of Graft	Time of Transplantation	Fate of Fetuses*
1	Pro-oestrus	13th day of term	Aborted 70 hrs.
3	Pro-oestrus	12th day of term	Aborted 73 hrs.
4	Pro-oestrus	12th day of term	Aborted 74 hrs.
5	Pro-oestrus	13th day of term	Aborted 80 hrs.
21	Pro-oestrus	12th day of term	Aborted 70 hrs.
10	Oestrus	13th day of term	Resorbed†
17	Oestrus	13th day of term	Aborted 20th day
11	Metoestrus	12th day of term	Aborted 10th day
30	Metoestrus	13th day of term	Aborted 20th day
2	Dioestrus	13th day of term	Delivered 21st day‡
6	Dioestrus	12th day of term	Resorbed†
7	Dioestrus	13th day of term	Aborted 20th day
8	Dioestrus	13th day of term	Delivered 21st day‡
9	Dioestrus	13th day of term	Delivered 21st day‡
12	Dioestrus	13th day of term	Resorbed†
14	Dioestrus	13th day of term	Delivered 21st day‡
31	Dioestrus	13th day of term	Delivered 21st day‡
18	Pregnant	13th day of term	Aborted 65 hrs.
20	Pregnant	13th day of term	Delivered 21st day

* After removal of second ovary.
† Autopsy showed failure of graft to take.
‡ Young not viable.

Four of the grafts failed to "take" successfully (rats 6, 10, 12, 18) and the fetuses were either resorbed or aborted. This failure was demonstrated by a careful examination of the site of the graft and by a histological study. A complete fibrous infiltration could be easily detected. That the pro-oestrus grafts had "taken" was shown by a histological examination of three of them. The grafts of the remaining two rats (rats 1 and 4) were allowed to remain *in situ*, and their success was determined by subsequent examinations of the vaginal content of the hosts. Typical oestrous cycles were exhibited by these two animals for 6 months following transplantation.

The histological picture of the pro-oestrus grafts revealed de-

veloping corpora lutea. Here it might be noted that, so far as could be determined, both the theca interna and the granular layers were contributing to the formation of the corpora. This agrees with the findings of Engle and Smith (1929) and others. The dioestrus grafts exhibited varying numbers of corpora lutea; some of them with retained ova. Ripened follicles were also found in the sections made from these grafts.

The absence of all ovarian tissue (either regenerated tissue or supernumerary ovaries) was demonstrated by sacrificing all animals and making a careful binocular examination of the ovarian region.

A series of five control animals was kept. They were unilaterally ovariectomized and were allowed to recover fully before impregnation. On the fourteenth day of pregnancy their second ovaries were removed. The results, tabulated in Table II, tend to show that in the rat the complete removal of the ovaries will terminate pregnancy.

TABLE II

RESULT OF BILATERAL OVARIECTOMY

Rat No.	Time of Ovariectomy	Time of Abortion
22	14th day	40 hrs. after ovariectomy
23	14th day	36 hrs. after ovariectomy
24	14th day	42 hrs. after ovariectomy
25	14th day	44 hrs. after ovariectomy
32	14th day	44 hrs. after ovariectomy

A series of three transplantations was made, using immature ovaries, since it seemed evident that any results obtained would be more conclusive if ovaries devoid of all luteal tissue were utilized. The donors were 30 days old, considerably under the age of maturity, which, in the colony used, averaged slightly over 50 days. The procedure used in the previous series was followed, but abortion occurred in each instance within 50 hours; indeed, the recipients reacted much the same as though no grafts whatever had been made.

An attempt to discover an explanation of the failure to secure viable young by the methods employed suggested the possibility of insufficient vascularization of the graft before the entire burden of maintaining pregnancy was thrown upon it. Accordingly, a series of transplantations was made, the first steps of which were similar to

those of the preceding groups. Transplantations, however, were made on either the ninth or tenth day of gestation, whereas the hosts' second ovary was not extirpated until the thirteenth or fourteenth day. Immature ovaries were employed, for the reason suggested above. Table III records the outcome of this attempt.

The five animals which went to completion of the period of gestation gave birth to normal litters. The young suckled normally and all survived. The histological picture of the recovered grafts revealed typical corpora lutea. A representative section is shown in Plate I, Figures 1 and 3. That there was no luteal tissue present

TABLE III

RESULTS OF IMPLANTATION OF IMMATURE OVARIES

Rat No.	Age of Donor	Time of Transplantation*	Time of Ovariectomy	Result
26	30 days	9th day	13th day	Normal birth
27	32 days	9th day	13th day	Normal birth
28	31 days	10th day	14th day	Normal birth
29	30 days	10th day	14th day	Fetuses resorbed†
35	33 days	10th day	14th day	Fetuses resorbed†
36	33 days	9th day	13th day	Normal birth
38	32 days	9th day	13th day	Abortion on 18th day
39	32 days	10th day	14th day	Normal birth

* Day of pregnancy on which transplant was made.

† Autopsy showed complete fibrous infiltration upon site of graft.

in the original graft is demonstrated by Plate I, Figure 2, which is a section from the opposite ovary of the donor furnishing the graft shown in Plate I, Figure 1.

The grafts in animals 29 and 35 failed to "take," and as a result pregnancy was terminated. Animal 38 aborted on the eighteenth day. Examination of the graft showed it to be necrotic in the center; but about the periphery patches of luteal tissue could be seen.

DISCUSSION

The results of this work seem in agreement with the recent studies of Parkes (1928*b*) who, although approaching the problem in a somewhat different way, obtained essentially the same results. He unilaterally sterilized mice (by X-irradiation) and allowed them to become pregnant. Subsequent removal of the sound ovary contain-

ing corpora lutea invariably terminated pregnancy, whereas the removal of the sterilized ovary (which had no corpora lutea) failed to produce any changes. The sterilized ovary, incidentally, was capable of performing all ovarian functions other than those associated with the corpus luteum (Brambell, Parkes, and Fielding, 1927). These experiments seem to demonstrate that in the mouse the presence of corpora lutea of pregnancy is necessary during the entire gestational period. In the work under consideration in this report only those animals whose grafts contained well-developed corpora lutea were able to produce viable young. Grafts which for some reason did not develop corpora lutea were incapable of maintaining pregnancy.

The mechanism involved in the maturation of immature grafts is, of course, obscure. However, in the light of recent work upon the pituitary-ovarian relationship, it is probable that the anterior pituitary was the responsible factor. In view of the fact that fresh anterior pituitary implants will bring about superovulation and a pronounced formation of corpora lutea in rodents (Smith and Engle, 1927), even in very young individuals, it seems probable that the anterior pituitary of the pregnant animals so acted upon the immature grafts that they were transformed into efficient substitutes for the host's own gonads. This transformation evidently requires several days, since the animals which were ovariectomized shortly after the graft was made aborted, although the grafts later became functional—as was demonstrated by vaginal smears of the hosts. Grafts which were allowed several days for establishment and transformation before the burden of maintaining pregnancy was shifted upon them were able to carry it successfully.

The luteal tissue formed in these engrafted ovaries was for the most part in the nature of the typical corpora lutea formed from the follicular layers. However, in a few of the recovered grafts the luteal cells were not massed in the typical manner but were diffused and scattered in ill-defined patches. Parkes (1928*b*) records a similar condition found in mouse ovaries after sterilization and subsequent treatment with sodium-hydroxide extracts of the anterior pituitary. He considers luteal tissue of this type as having developed directly from the parenchymatous proliferation of the germinal epithelium.

PLATE I

FIG. 1.—Section through immature ovary from a rat 30 days old. Complete absence of luteal tissue.

FIG. 2.—Section through the grafted ovary corresponding to the one shown in Fig. 1, after recovery from rat No. 26. Pronounced development of luteal tissue.

FIG. 3.—Enlarged microphotograph of one of the corpora lutea shown in Fig. 2.

PLATE I

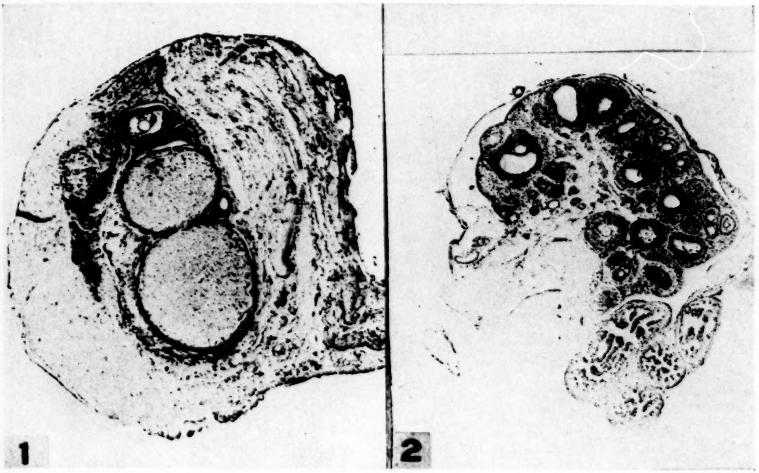

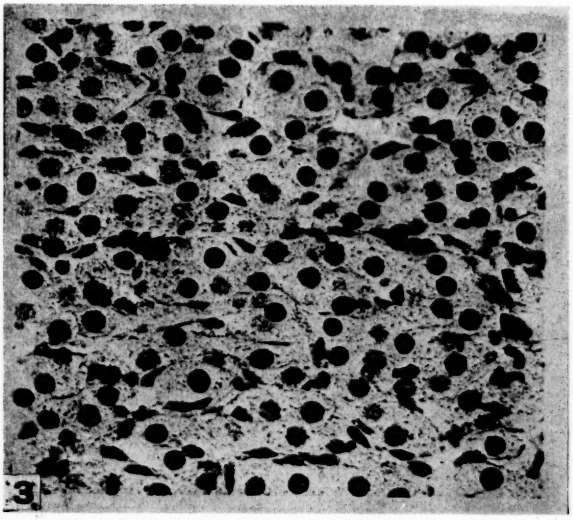

Results obtained in the series of animals in which grafts taken from donors in the various stages of the oestrous cycle were employed would indicate that the stage of the cycle of the donor may exercise some effect upon the duration of pregnancy in the recipient (Nelson and Haterius, 1929). As shown in Table I, the interval between ovariectomy and abortion varied with the cyclic condition of the graft. The fact that abortions occurred most quickly when the host carried an ovary of pro-oestrus suggests the possibility that the follicular hormone present in the mature follicles of this stage may have had some influence in terminating pregnancy. It is recognized that these animals would probably have aborted in any event had not a graft been made, but the foregoing possibility strongly suggests itself. Smith (1926) has shown that injection of follicular fluid into pregnant rats will terminate pregnancy. The experimental termination of pregnancy by means of the follicular hormone suggests the part it may play in normal parturition. Dixon and Marshall (1924), in fact, have advanced a hypothesis of parturition based upon the pre-partum ovary as the first agent in the mechanism.

Conversely to the results obtained with pro-oestrous grafts, the fact that luteal tissue occurs in its greatest prominence during the dioestrous interval may be of some significance in connection with the observation that implants of this stage met with the highest degree of success in the maintenance of pregnancy.

The percentage of successful transplantations made in this work was high for homotransplants (three of the cases reported were syngenesiotransplants. Long and Evans (1922) report one successful graft out of ten attempts. Del Castillo (1928) has reported very good results with homotransplants in the rat, obtaining positive results in six out of seven cases. In the series of grafts reported here, twenty-four out of thirty transplantations made were successful. In the case of those grafts which were recovered after only a week or 10 days, it is, of course, problematical as to what their ultimate fate would have been had they remained *in situ*. However, a number of grafts were allowed to remain, and their success was tested by examining the vaginal smears of the hosts. In every instance typical oestrous cycles were exhibited for several months.

SUMMARY

1. An attempt was made at maintaining pregnancy in ovariectomized rats by means of substitutional transplants both from virgin and from immature individuals.

2. Response on the part of the host, in so far as maintenance of pregnancy was concerned, varied with the cyclic condition of the graft at time of implantation. Grafts of dioestrous gonads attained the highest degree of success, whereas implants of pro-oestrous and oestrous ovaries were without effect.

3. Immature ovaries were successful in maintaining pregnancy, but viable young were not produced unless sufficient time was allowed for vascularization of the graft.

4. Grafts recovered from cases of normal gestational periods displayed a pronounced development of luteal tissue. Control sections were negative in this respect.

5. Doubly ovariectomized controls invariably aborted.

6. It is concluded that luteal tissue is essential for normal maintenance of pregnancy in the rat.

LITERATURE CITED

BELL, BLAIR. 1920. The sex complex. London.

BRAMBELL, F. W. R.; PARKES, A. S.; and FIELDING, U. 1927. Changes in the ovary of the mouse to X-irradiation at three weeks old. Proc. Roy. Soc. Lond., CI, 29.

DAELS, F. 1908. On the relations between the ovaries and the uterus. Surg., Gyn., and Obst., VI, 153.

DEL CASTILLO, E. B. 1928. Le cycle oestral du rat normal et décapsulé. Comp. Rend. Soc. Biol., XCIX, 1403.

DIXON, W. E., and MARSHALL, F. H. A. 1924. The influence of the ovary on pituitary secretion; a probable factor in parturition. Jour. Physiol., LIX, 276.

DRIPS, D. 1919. Studies on the ovary of the spermophile with special reference to the corpus luteum. Amer. Jour. Anat., XXV, 117.

DRUMMOND-ROBINSON, G., and ASDELL, S. A. 1926. The relation between the corpus luteum and the mammary gland. Jour. Physiol., LXI, 608.

ENGLE, E. T., and SMITH, P. E. 1929. The formation of the corpus luteum in the rat from both granulosa and theca interna. Anat. Rec., XLII, 48.

ESSEN-MOLLER, F. 1904. Doppelseitige Ovariotomie und Anfänge der Schwangerschaft. Centralb. f. Gynäk., XXVIII, 869.

FRAENKEL, H. 1903. Die Funktion der Corpus luteum. Arch. f. Gynäk., LXVIII, 430.

HAMMOND, J. 1927. Reproduction in the cow. London.

HARRIS, R. G. 1927. Effect of bilateral ovariectomy upon the duration of pregnancy in mice. Anat. Rec., XXXVII, 83.

HARTMAN, CARL. 1925. The interruption of pregnancy in the aplacental opossum: a study in the physiology of implantations. Amer. Jour. Physiol., LXXI, 436.

HERRICK, E. H. 1928. The duration of pregnancy in guinea pigs after removal and also after transplantation of the ovaries. Anat. Rec., XXXIX, 193.

KLEINHAUS, F., and SCHENK, F. 1907. Experimentelles zur Frage nach der Funktion des Corpus luteum. Zeitschr. f. Geburts. u. Gynäk., LXI, 283.

LONG, J. A., and EVANS, H. M. 1922. The oestrous cycle in the rat and its associated phenomena. Mem. of the Univ. of Calif., Vol. VI.

MARSHALL, F. H. A., and JOLLY, W. A. 1908. On the results of heteroplastic ovarian transplantation as compared with those produced by transplantations in the same individual. Quar. Jour. Exp. Physiol., I, 115.

NELSON, W. O., and HATERIUS, H. O. 1929. Differential reaction of ovariectomized pregnant rats to ovarian grafts in various stages of the oestrous cycle. Proc. Soc. Exp. Biol. and Med., XXVI, 660.

PARKES, A. S. 1928*a*. The rôle of the corpus luteum in the maintenance of pregnancy. Jour. Physiol., LXV, 34.

———. 1928*b*. The functions of the corpus luteum. I. The mechanism of oestrous inhibition. Proc. Roy. Soc. Lond., CIV, Ser. B, 171.

SMITH, M. 1926. On the interruption of pregnancy in the rat by the injection of ovarian follicular extract. Johns Hopkins Hosp. Bull., XXXIX, 203.

SMITH, P. E., and ENGLE, E. T. 1927. Experimental evidence regarding the rôle of the anterior pituitary in the development and regulation of the genital system. Amer. Jour. Anat., XI, 159.

WEYMEERSCH, A. 1907. Étude sur le mécanisme de l'avortement après ovariotomie double et sur la restauration uterine consecutive. Jour. d'Anat. et de Physiol., XLVII, 233, 414.

STUDIES ON RESPIRATION AND GLYCOLYSIS IN PLANARIA. I. METHODS AND CERTAIN BASIC FACTORS IN RESPIRATION

(Twelve figures)

M. FRAPS

Zoölogical Laboratory, University of Chicago, and Desert Laboratory of the Carnegie Institution of Washington

THE present paper is the first of a series on investigations now under way on the respiratory and glycolytic metabolism of *Planaria*. The first part is devoted to a description of the methods and apparatus developed for the accurate measurement of oxygen consumption, respiratory carbon dioxide, aërobic and anaërobic glycolysis in *Planaria* and similar low invertebrate forms. The methods are based on those of Warburg; a number of refinements in apparatus and experimental procedures, however, have been developed in connection with the present work.

In the second part of this paper are given experimental results on the relation of oxygen consumption to a number of basic environmental factors. A part of the program for subsequent work lies in extending these investigations to a number of different forms of *Planaria*. It will also include work on glycolysis which is not taken up in this paper. Investigations are also planned on the analysis of physiological gradients (as formulated by C. M. Child) from the standpoint of energy-exchange reactions. Considerations of methods and procedures have been made with the view of such analysis constantly in mind.

I wish to express my appreciation to Dr. C. M. Child for his unfailing interest in this work, and to Dr. Forrest Shreve, of the Desert Laboratory, where the work has been done. I wish also to express to the administrative officers of the Carnegie Institution of Washington my appreciation of the facilities which have been placed at my disposal at the Desert Laboratory.

I. METHODS AND APPARATUS

1. *The determination of energy-exchange reactions.*—Such evidence as is available on the rate of oxygen consumption of sections of *Planaria* indicates that the

order of difference between sections is relatively small. The error in the determination of oxygen consumption or other energy-exchange reaction is thus relatively great. There is every reason, then, to undertake the development or refinement of methods in order to make possible the determination of oxygen consumption or other energy-exchange reactions with the greatest possible degree of accuracy.

The use of relatively large amounts of material does not offer advantages in the determination of differences between sections. In the first place, the sections themselves must be as small as possible in order to minimize the secondary gradient effects induced in pieces freed from the normal gradient controls. Secondly, the number of pieces or sections used experimentally must be kept low in order that the change with time of rate of the energy-exchange reaction is comparable in all sections.

A second general consideration is that of measurement of all possible phases of energy-exchange reactions by similar methods if possible. Such a procedure has the advantage of simplification of experimental conditions and the relation of one phase of measurements with another under conditions involving the minimum of arbitrary experimental factors.

The manometer method as used by Warburg and his associates in the analysis of energy-exchange reactions in ca[illegible]d normal tissues more completely fulfils the requirements of the problem [illegible]onsidered than does any other. The principles and considerations involved [illegible] use of the method are given in detail by Warburg (1924). Such modifi[illegible] and refinements as are herein described have been made toward the enc[illegible]reater sensitivity in apparatus and the adaptation of the method to special pr[illegible]ems involved in handling *Planaria* and similar free motile forms.

2. *The manometric method.*—The application of the manometric method to the simultaneous determination of oxygen consumption and carbon-dioxide production in the presence of both these gases is due to Warburg. The procedure described by him is based on the simple gas laws, the law of partial pressures, and the differential absorption of oxygen and carbon dioxide for water. If a given tissue mass be allowed to respire normally in a closed chamber containing very little water, the pressure changes with time will be relatively small, since the volume of carbon dioxide produced will approximate the volume of oxygen consumed. If, now, the fluid volume of a second chamber comparable in size and tissue content be increased greatly, the consumed oxygen will still be drawn largely from the gas space because of its low absorption coefficient for water. The carbon dioxide produced, on the other hand, will be retained in the fluid phase to a much higher degree. A change in pressure results which is different from the change observed in the first instance. From the observed pressure changes measured in the two chambers and the relations involved in the chamber constants for each case, the amounts of oxygen consumed and carbon dioxide produced in each chamber are calculated. Using this principle with modification in detail, respiration and glycolysis (both aërobic and anaërobic) of various ver-

tebrate tissues have been measured with good agreement by a number of investigators.

The method assumes that the respiratory quotients of the two tissue masses in the different chambers remain constant during the course of an experiment. Or, if the determinations of pressure changes be made on the same tissue, using large and small fluid volumes successively, the respiratory quotient must be known to remain constant during the course of both experiments. The procedure also requires that the manometers be shaken at a rate sufficient to maintain equilibrium of gas distribution between gas and liquid phases of the system at the time of making pressure determinations.

Preliminary experiments with *Planaria* free in modified semiround bottom Barcroft chambers showed very irregular results. Variations as high as 30 per cent occurred in the determination of pressure changes for 20-minute intervals. These variations have been eliminated through the use of special types of chambers, a "tissue retainer," and refinements of experimental procedure. The retainer, while highly effective, has been given up in preference for the more convenient type of chamber described later.

3. *Manometers, chambers, and mountings.*—The essential features of the manometers and chambers are shown in Figures 1 and 2. Figures 3 and 4 show the types of chambers which have been found effective. The "retainer" is shown in Figure 5.

The manometers are of the constant-volume type, similar to the Barcroft manometer (not the Barcroft differential manometer). In order to completely eliminate room-temperature effects, the entire gas volume of the apparatus is carried within the constant-temperature bath. The tube opening to the atmosphere (the pressure tube, T_1); the adjustment bulb, B, for the regulation of constant volume; and the stopcock, SC, are carried out of the bath. Tubes T_1 and T_2 are of *ca.* 0.8 mm. in diameter. The central tube is somewhat larger in order to accommodate the excess of filling solution required for adjustment of the constant level at various pressures. Since the filling solution is in contact with glass only, liquids other than Brodie's solution may be conveniently used.

The manometer tubes are sloped at *ca.* 40°. The use of the sloping gauge with kerosene as filling solution greatly increases the sensitivity of the apparatus over that of the usual vertical gauge type. All pressure tubes are 40 cm. in length, graduated in 0.5 mm.

The chambers are designed to require a minimum of shaking for the maintenance of equilibrium between gas and liquid phases of the closed system. A second consideration is involved in the necessity for handling *Planaria* as little as possible. The third condition—desirable at least in certain cases—is to use such chambers as are readily interchangeable in order that several may be used with a single manometer. The experimental work on regenerating sections requires either such a procedure or undue handling of material for each determination of energy exchange.

The final type of chamber adopted is shown in Figure 3. It consists simply of a shallow dish the bottom of which is either flat or but slightly concaved. The rim of the chamber is first beveled in order to smooth the edges, and is then ground until a narrow bearing is formed. (The narrower this bearing the better.) The chamber head (*CH*, Figs. 1, 2, and 3) is ground to a plane surface on its

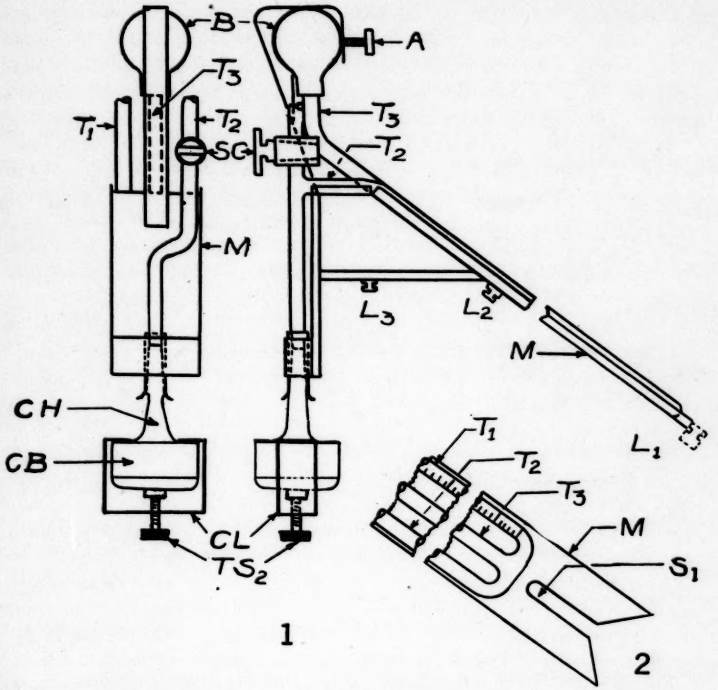

FIGS. 1 and 2.—Side and end views of the manometers. *A*, constant-level adjustment. *B*, bulb. *CB*, chamber base. *CH*, chamber head. *CL*, clamp. L_1, L_2, and L_3, lugs engaging slots in shaking mechanism. *M*, mounting. S_1, slot in mounting *M*. *SC*, stopcock. T_1, pressure tube. T_2, constant-volume tube. T_3, tube to adjustment bulb. TS_2, setscrew for tightening chamber base to head.

lower side. The chamber rim and the ground surface of the head are greased very slightly, placed in position as shown in Figures 1 and 2, and held in place by tightening the thumbscrew TS_2 in the clamp *CL*. A few turns of the chamber against the head insure a firm and leak-proof seal. Chambers of this type have been used varying in capacity from *ca.* 4 cc. to *ca.* 30 cc. They have been tested frequently for leaks but have never given trouble from this source.

The flat bottom and relatively great surface of solution in proportion to depth makes possible complete equilibrium of gases in solution at a moderate rate of shaking. The worms are observed to remain quietly in the angle between the bottom of the chamber and the side walls. Occasionally there is some crawling about immediately after the material is placed in the chambers, but this is quickly over.

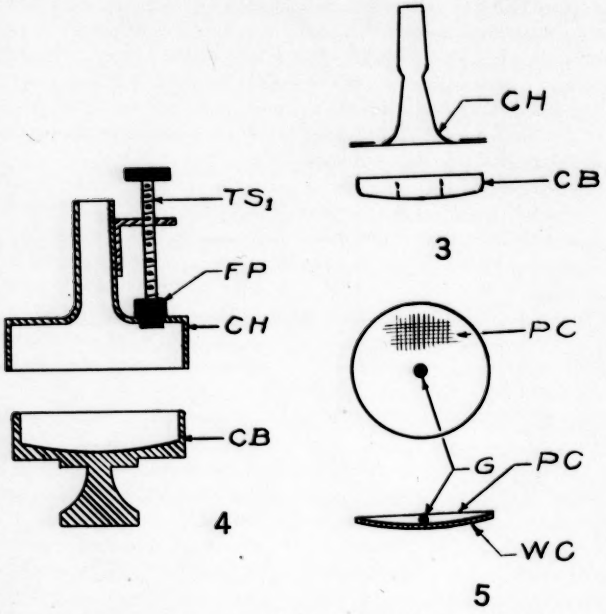

FIG. 3.—Chamber assembly. *CB*, chamber base. *CH*, chamber head.

FIG. 4.—Metal chamber. *CB*, base. *CH*, head. *FP*, filling plug. TS_1, thumbscrew.

FIG. 5.—Tissue retainer. *WC*, watch crystal. *PC*, cover of bolting-silk. *G*, glass bead.

The diameter of the chambers is obviously a factor in the amount of shaking required. I have noted also that with a very small fluid volume the effect of shaking is more pronounced than with larger fluid volume in chambers of the same diameter. With a little experience, however, it is possible to regulate the rate of shaking so that this effect is avoided where it is desirable to use very small quantities of solution.

Any number of chambers of this type may be used on a single chamber head. It is therefore not necessary to remove the worms from a given chamber during long-time experiments in order to use the manometers. Moreover, it is pos-

sible to keep the material in chambers for some time before experiments are begun, thus avoiding in a large measure the increased motor activity usual to *Planaria* when they are first brought on to a clean surface.

Chambers of the type shown in Figure 4 have also been used. This chamber consists of an all-metal head and base seating at the upper rim of the base against the head. The vertical side walls serve as convenient guides. The worms are not placed directly in the chamber but are kept in small insets exactly similar to the chamber base described above. In making a determination, the inset is placed in the metal base and the whole is set up as shown. A plug, *FP*, held in place by the thumbscrew, TS_1, permits ready aëration of the chamber.

This procedure is very convenient for the measurement of oxygen consumption in the absence of carbon dioxide. It is not adapted to the procedures requiring relatively large fluid volumes.

The manometer mountings (*M*, Figs. 1 and 2) are of thin sheet metal, with angle edges for rigidity. Each instrument is permanently fitted to its mounting, and the whole is placed in the shaker as hereinafter described. The chamber head is fastened to the mounting directly; or where the entire head is removable, as in Figures 1 and 2, the female member of the connection is held by the frame.

The retainer (Fig. 5) consists of three parts: a watch crystal, *WC*, meniscus form, 20–38 mm. in diameter; a protective cover, *PC*, of bolting-silk or unweighted chiffon; and a glass bead, *G*, 4–5 mm. in diameter, closing an aperture in the center of the silk covering.

The unit is assembled by placing the glass bead in the concavity of the watch crystal and drawing an apron of silk taut with several turns of wire around a cork placed perpendicularly on the convex crystal face. With the cover thus firmly held in position a thin film of sodium silicate is applied around the bevel of the crystal. The retainer is then placed in an oven at 90°–100° C. for 24 hours, after which time the excess silk comprising the apron is cut at the angle of the bevel and the convex face of the watch crystal. Finally the unit, as it now appears in the figure, is placed in distilled water and kept for several days before using.

The experimental material, whole *Planaria* or sections, is introduced into the retainer through the aperture in the cover by means of a small pipette with a flared mouth. The concavity is cleared of air bubbles by gently shaking under solution, and the glass bead slipped into the aperture. In a remarkably short time—usually within 5 minutes or less—the worms are observed to be completely at rest; since they almost invariably move into the angle formed by the juncture of the silk and the crystal, it seems probable that the satisfaction of a thigmotropic response serves thus to decrease motor activity. When the retainer is transferred to the manometer chamber and shaken, very little movement is observed, and this for only a very short time.

In general, the material is kept in the retainers for at least 4 hours before transferring to the manometers. During this time the worms are under constant

experimental temperature and atmospheric conditions. Where the retainers have been used with sections, the retainer itself is kept under experimental conditions for some hours before the sections are introduced, thus insuring against gas absorption by the silk.

4. *Shaker and constant-temperature bath for manometers.*—The unit is detailed in Figures 6 and 7. Figure 6 gives the front-rear section, and Figure 7 a top view of the layout.

The constant-temperature tank measures 32 inches in height, 32 inches from front to rear, and 36 inches in width. Excepting for the plate-glass window, *W*,

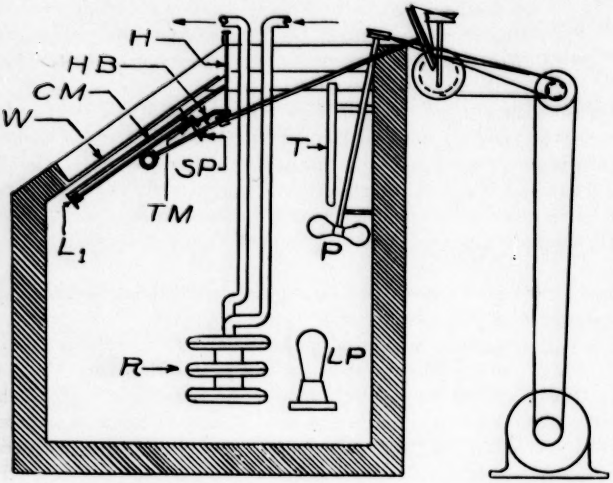

FIG. 6.—Side view of manometer shaker and constant temperature tank. *CM*, manometer carriage. *H*, handle for hinged bracket, *HB*. L_1, lug. *LP*, lamp. *P*, propeller. *R*, radiator. *SP*, spring. *T*, thermoregulator. *TM*, transverse aligning bar. *W*, window.

and the top, the entire tank is heavily insulated with Celotex. The manometer scales are read through the sloping window; this window and the top are each fitted with five separately removable 2-inch cork insets.

The tank is filled with clear cosmetic oil in which all movable parts of the shaking mechanism are submerged. An 8-inch propeller, *P*, vigorously stirs the oil; temperature differences in various parts of the tank are practically negligible.

Two inches beneath the window is the angle-iron shaker frame. The shaking mechanism consists of a transverse cam shaft carrying five cylindrical cams, *C*, which impart to the oscillating carriages, *OC*, a side to side motion. Each carriage is pivoted at the lower end to the shaker frame, while the upper end bears against the transverse member, *TM*. A heavy stud in each carriage engages the

diagonal groove of the underlying cam and thus translates the rotary motion of the shaft into the desired oscillating motion of the carriage.

In the lower center of the manometer mounting, M (Figs. 1 and 2) is a long slot, S_1, which engages the recessed lug, L_1, in the oscillating carriage pivot. A similarly recessed lug, L_2, in the manometer mounting fits into the slot, S_2, at the upper extremity of the oscillating carriage. In this position, then, the manometer mounting is pivoted at L_1, while the chamber at the upper end is shaken through the L_2–S_2 connection with the oscillating carriage.

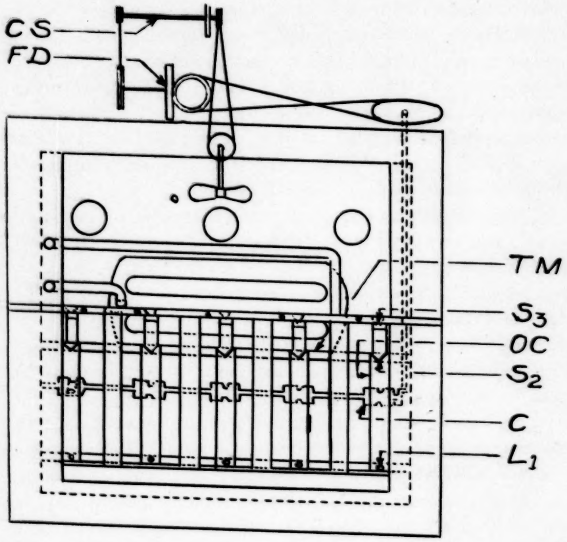

FIG. 7.—Top view of manometer shaker and constant temperature tank. C, cylindrical cam. CS, countershaft. FD, friction drive. L_1, lug for slot in manometer mounting. OC, oscillating carriage. S_2 and S_3, slots for lugs in manometer mounting. TM, transverse aligning bar.

To read any manometer scale, the mounting is slipped back and partially out of the slot, S_1, in the oscillating carriage. The hinged bracket, HB, is lifted, and the third recessed lug, L_3, of the manometer mounting is dropped into the slot, S_3, in the bracket. The mounting is thus held at the lower end by L_1 in S_1; and at the upper end the tension of the spring, SP, through the hinged bracket, HB, holds the mounting firmly against the aligned transverse member, TM. No variation in slope of the manometer scale in successive readings is then possible—a matter of some importance in the use of gauges of this type.

Both shaker and propeller are driven by a $\frac{1}{4}$ h-p. electric motor through the

countershaft, *CS*, as shown in Figures 6 and 7. A variable-speed friction drive, *FD*, of the type commonly used in motion-picture machines give a range in shaker speed of from 40 to 160 complete oscillations per minute.

5. *Constant-temperature bath and aëration system.*—Constant experimental conditions are essential for the comparison of susceptibility, regeneration, and other data with oxidation or other manometric determinations. It is further desirable to maintain stocks under constant conditions for at least some hours before use in the manometers, and of course also in the case of material used for long-time observations of metabolic rates. The tank and apparatus shown in Figure 8 have been designed with these objects in view.

The unit comprises a heavily insulated tank, approximately 4×5 feet in size, maintained at constant temperature in the manner later described. A propeller, *P*, stirs the water with which the tank is nearly filled. The heating units, *L*, and the cooling radiator, *R*, are placed at the bottom of the tank.

Stock pans, experimental flasks (U_1, U_2, U_3), test tubes, etc., are carried by racks so fitted that the larger portion of the receptacle is well submerged. Porcelain steam-table insets are used for keeping stocks.

Constant aëration is maintained at all times by means of the bulb pump shown in Figures 9 and 10 (*GC*, Fig. 8). Two series of twelve De Vilbiss rubber bulbs, No. 2, are mounted on opposite sides of a camshaft, *S*. Between each bulb and its eccentric, *E*, is a compression plate, *PP*, held in position by brass lever arms, *LR*. The eccentrics are staggered in order to distribute the load evenly. In operation the bulbs are compressed and released about 100 times per minute. A single bulb is sufficient for the aëration of a stock pan containing 8 liters, or for three to six regeneration flasks.

6. *Temperature control.*—Room temperatures at the Desert Laboratory are for a considerable portion of the year from 5° to 20° C. above experimental temperatures. A small refrigeration plant has therefore been installed; during even the hottest days of summer this has maintained the experimental temperature of 20°–22° C. in both the manometer bath and the stock tank.

The refrigeration tank is of *ca.* 25 gal. capacity; in this are the coils of a ¼ h-p. Kelvinator machine. The temperature of the water in the tank is automatically maintained at *ca.* 4° C. below the desired experimental temperature. The water thus cooled is circulated by means of a small centrifugal pump, *CP* (Fig. 8), through the radiator, *R*, in the shaker unit, thence through a second radiator in the stock tank, back to the low temperature unit. A valve in the circuit regulates the amount of water passed through the radiators, and with a little practice a very delicate control of the temperature differences between the refrigeration tank and experimental units is possible.

The radiators in both the manometer bath and stock tank are placed to receive the full force of the circulating propellers. Each radiator is a three-section, 22-inch steamheating unit.

The exact experimental temperature is maintained by heating with lamps operated by thermoregulators. In the manometer bath a large specially con-

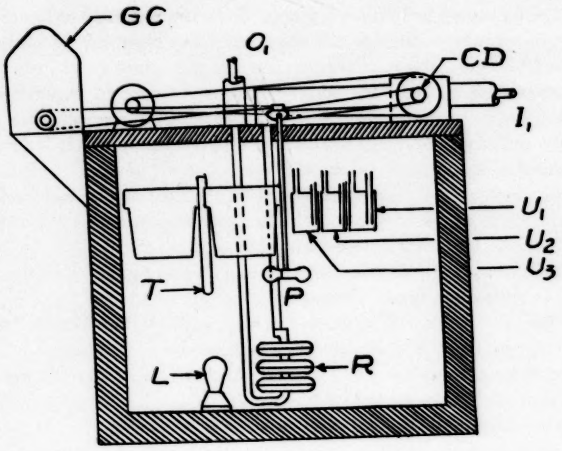

8

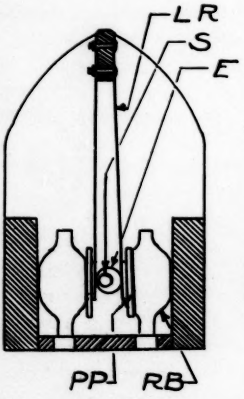

9

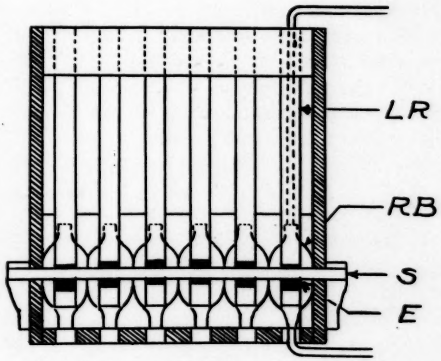

10

FIG. 8.—Constant temperature stock tank. *CD*, circulating pump. *GC*, gas circulating pump. *L*, lamp. *I* and *O*, cooling circuit. *P*, propeller. *R*, radiator. *T*, thermoregulator. U_1, U_2, and U_3, regenerating flasks.

FIGS. 9 and 10—Aëration or gas circulating pump. *E*, eccentric. *LR*, lever arms. *PP*, compression plates. *RB*, rubber bulb. *S*, shaft.

structed toluene regulator is used for control; this operates a relay which in turn operates the secondary heating circuit. Temperature control is within $\pm 0.003°$ C.

A Harvey thermoregulator and relay are used in the stock tank, maintaining temperature within $\pm$ 0.05° C. of that indicated.

7. *Technical details.*—

a) The gas mixtures: The determination of glycolysis manometrically is based upon the liberation of CO_2 from the bicarbonate of the Ringer solution in the presence of grape sugars. The bicarbonate in solution must be buffered with CO_2. It is accordingly necessary to prepare gas mixtures containing the necessary amount of CO_2. Under certain conditions it is also desirable to use a relatively high oxygen tension; and finally, for measurement of anaërobic glycolysis the gas must be free of oxygen.

Oxygen, carbon dioxide, and nitrogen are obtained in the usual 50- or 75-pound steel cylinders. The desired mixture is then prepared in similar cylinders at about 40 atmospheres pressure. The exact constitution of the gas is determined in an Orsat or Haldane apparatus.

The nitrogen-carbon dioxide mixture contains from 2- to 3-volume per cent oxygen. This is removed by running the gas through a heated combustion tube containing rolls of fine copper gauze, after which it is carried through a coil of copper in the constant-temperature tank for cooling. Analysis by the Haldane method shows no trace of oxygen.

b) Hydrogen-ion concentration in the bicarbonate-CO_2 system: The hydrogen-ion concentration is controlled by the concentrations of bicarbonate and free CO_2 according to the Hasselbalch-Henderson equation (Hasselbalch, 1917). The use of the method in connection with the manometric method is due to Warburg (1924).

The calculation of hydrogen-ion concentration is according to the equation

$$\mathrm{pH} = p_K + \log \delta + \log \frac{\mathrm{NaHCO_3}}{\mathrm{CO_2}},$$

where pH is the negative log of the hydrogen-ion concentration, p_K the negative log of the first dissociation constant of carbonic acid, δ the degree of dissociation of bicarbonate, $NaHCO_3$ the total concentration of bicarbonate, and CO_2 the concentration of free CO_2.

For $\log p_K + \log \delta$ Hasselbalch writes $\log p_{K_1}$, the values of which are given by him for the following pure bicarbonate concentrations at 38° C. and 18° C.

$NaHCO_3$, conc.	0.05N.	0.03N.	0.02N.	0.01N.	0.005N.
p_{K_1} at 38° C.	6.33	6.36	6.38	6.42	6.45
p_{K_1} at 18° C.	6.43	.....	.....	6.53	.....

It will be noted that increasing the temperature from 18° C. to 38° C. decreases the value of p_{K_1} by approximately 0.1. The difference in p_{K_1} at 18° C. and

22° C. need not, therefore, be taken into account in the computation of pH at the latter temperature. Also, where Hasselbalch gives the values of p_{K_1} for 38° C. but not for 18° C., these latter values are obtained by adding the constant difference 0.1 to p_{K_1} for the pure bicarbonate solution at 38° C.

c) Manometer chamber volumes are measured according to the relation given by Warburg (1923):

$$V = a\,\frac{h_2}{h_2 - h_1},$$

where h_1 is the pressure developed in the displacement of a given length of the constant-volume tube when the chamber is empty, and h_2 is the pressure developed in the displacement of the same volume when the chamber is partially filled with mercury. The following precautions are carefully observed during the operation: (1) The barometer and temperature must remain practically constant. (2) The volume tube must be allowed to completely empty itself; the time interval is 1 hour. (3) The ratio $v:a$ must fall between 3:4 and 5:6.

d) The chamber constant, K, expresses the number of cubic millimeters of gas evolved into, or removed from, a given chamber for each millimeter change in the level of the manometer solution. Then

$$X = hK,$$

where X represents the quantity of gas evolved or removed, h is the millimeter change in manometer scale, and K is the chamber constant. The value of K for the vertical-scale manometer is given by the formula

$$K = \frac{v_G \frac{273}{T} + v_F \alpha}{P_0},$$

where for a given case, v_G is the gas volume, v_F is the fluid volume, T is the absolute temperature, α is the absorption coefficient for O_2 or CO_2, and P_0 is the normal pressure of the manometer solution in millimeters.

In using an instrument with sloping scale, K must express the volume change in terms of millimeter change in scale reading at a given slope. Denote the angle of slope by ϕ, the pressure difference in millimeters by p, and let h be the scale difference. The ratio of change in pressure to scale difference is then $p:h$; that is, each millimeter change in manometer scale is equal to $p:h$ mm. change in pressure. But $p:h$ is sin ϕ, whence

$$K = \frac{v_G \frac{273}{T} + v_F \alpha}{P_0} \sin \phi .$$

Or, more conveniently:

$$K = \left(v_G \frac{273}{T} + v_F \alpha \right) \frac{\sin \phi}{P_0} .$$

If the absolute magnitudes of oxidative and glycolytic measurements are required, the value of sin ϕ is obtained by measuring directly the slope of the manometer tubes. For my instruments the value of sin ϕ thus determined is 0.627. P_0 for caproic acid is 11, 160 mm. at 16° C. The expression $\frac{\sin \phi}{P_0}$ is therefore equal to 0.0000562 for the conditions under which the instruments are used, and the chamber constant is given by

$$K = \left(v_G \frac{273}{T} + v_F \alpha\right) 0.0000562 ,$$

where v_G and v_F are expressed in cubic millimeters.

e) Elimination of barometric effects: The elimination of barometric fluctuations on the manometer scales is important where the total scale movement is small. The method of eliminating such changes during readings is as follows:

The pressure tubes are connected at the top to a small copper tubing manifold. This manifold in turn has a small outlet which comes off at its center. At any convenient place where temperature changes are slow, a large bottle or other container is placed. I have used three 20-liter bottles buried several feet underground. From this reservoir a small copper tube leads to the manometer bath. At any convenient place in the line a three-way stopcock is placed: this allows the line to open directly to the air through the stopcock, or to remain closed to the atmosphere at the stopcock, but with the tube from manometers to reservoir open.

After the manometers are placed in the shaker bath, the single outlet from the manifold is connected to the tubing from the bottle with a small piece of fairly heavy-wall small-bore rubber tubing. The length of the rubber connection is as small as possible. In order that the manometers may shake freely, the copper tubing runs vertically away from the manifold connection for a length of several feet. From this point it is carried directly to the buried bottle.

The procedure in reading the manometers is simple. A few minutes before the reading is made, the constant-level tubes are approximately adjusted. This is readily done while the manometers are shaking. The stopcock in the line leading from the manifold to the bottle is then closed. When the readings of the pressure tubes are made, the system is virtually constant in so far as barometric effects are concerned.

The only consideration requiring attention in this procedure is to ascertain the change in pressure of the controlled atmosphere due to the total change in volume of the system in bringing each pressure tube to its final position. In general, this difference in volume change from the first tube to the final tube is not more than 10 cubic millimeters. If a bottle of 10 liters is used, the change is one part in a million.

This procedure may also be used with the manometers connected to the reservoir throughout the course of an experiment. It is only necessary to know

that, firstly, the change in volume of the reservoir brought about by the change of volumes in the pressure columns is not greater than the usual atmospheric-pressure variations during an experiment; secondly, that the temperature of the reservoir bottle remains fairly constant during the course of an experiment—a condition usually easily fulfilled if the reservoir be buried in an appropriate place.

It should be pointed out that this method does not make a differential manometer of the usual open-tube manometer. The only objective is the control of atmospheric changes where such changes are relatively rapid, and a number of manometers are corrected by a single control. Where these conditions must be fulfilled, the procedure given is a decided advantage.

f) Determination of weight of worms: Inasmuch as experiments are anticipated using worms over long periods of time, as, for instance, in the regeneration of planarian sections, I have used the wet weight of material as the basis for the calculation of results. After trying a number of different methods, the following has been adopted as best satisfying the conditions at hand.

A small watch crystal is paraffined on its concave surface to serve as a receptacle for the material to be weighed. A light-weight cover (*ca.* 8 mm. in diameter and 5 mm. deep) is placed over the material after preparation for weighing.

The material to be weighed is placed on the watch crystal with a medicine-dropping pipette. If care is used in thus placing the material on the paraffined surface, only a single drop of solution will be formed. With the pipette most of this drop is removed. The crystal cover, and partially prepared worms, are now placed on the balance, and the approximate weight is placed on the opposite pan. This preliminary weighing is only in order to facilitate the final weighing. Having obtained this initial weight, the remainder of the water surrounding the material must be removed. Three small torpedo-shaped pellets of Kleenex absorbent paper are run successively around the worms, care being used to keep the worms in a single mass. With a little practice it is easily possible to control within close limits the amount of water thus removed. The essential point is to remove all water from the paraffin surrounding the material and gradually work the material into a well-centered mass. Lightly touching the edge of this mass with the absorbent material will remove the surplus water.

Following is a typical determination with an ordinary analytical balance: Weighings are 5 minutes apart. Five worms were used.

First weighing.....	431.80 mg.
Second weighing.....	431.75 mg.
Third weighing.....	431.90 mg.
Average.....	431.82 mg.

The weight of the receptacle and cover is 418.1 mg. The weight of the worms is accordingly 13.72 mg. plus or minus 0.08 mg. The error of a single determination is thus not more than ± 0.6 per cent. In general I have made three determi-

nations for each weight; the error in such cases falls well within the range of the metabolic determinations.

This method, in addition to being very simple and quick (even for checked readings), has two distinct advantages in the weighing of such material as *Planaria*. In the first place the worms are in the semidry condition for a minimum of time. Secondly, very little handling of the material to be weighed is necessary, and this only with a pipette.

In checking determinations of weight the small drop of water is replaced over the worms and allowed to stand for a few moments before removing by absorption as noted above.

For the absorption of surplus water I have found the paper sold under the trade name of Kleenex to give very satisfactory results.

g) Experimental procedures: Although all the experiments reported in this paper have as their end only the measurement of oxygen consumption, the following résumé of manometric procedures due to Warburg will be given in this place.

I. Measurement of oxygen consumption in the absence of carbon dioxide. This is the simplest and at the same time the most accurate of manometric procedures. The experimental material is introduced into the chamber with a measured amount of fluid. A small inset contains NaOH or KOH for absorption of CO_2. The manometer is placed on its carriage and shaken at a rate sufficient to maintain equilibrium between the gas and liquid phases of the system. The change in pressure is observed at convenient time-intervals. Then the amount of oxygen removed from the vessel is

$$X'_{O_2} = hk ,$$

where h is the pressure change and k is the chamber constant. The oxygen consumption per milligram per hour is given by

$$X_{O_2} = \frac{X'_{O_2}}{\text{tissue wt. hrs.}} ,$$

where the tissue weight is expressed in milligram wet or dry weight.

II. Measurement of respiratory quotient. The most accurate measurement of the respiratory quotient requires the determination of oxygen consumption according to the above and of carbon-dioxide production by measurement of free and bound CO_2 in different chambers. Since the method has been detailed recently by Richards (1929), it need not be discussed here.

III. Measurement of respiration and glycolysis by the method of differential chamber constants. The principles and procedures on which the method is based have been referred to previously (Warburg, 1924). The experimental pro-

cedure for the calculation of oxygen consumption and carbon-dioxide production when both these gases are free in the chamber is as follows:

Chamber I contains a small quantity of solution, chamber II a large quantity of solution. Chamber volumes and tissue weights are approximately equal in the two chambers. Denote the change in pressure in chamber I by h, in chamber II by h'; denote the weight of tissue in chamber I by a, in chamber II by b. Then the change of pressure in chamber II for the same quantity of tissue contained in chamber I is given by

$$H = H' \frac{a}{b}.$$

In order to calculate X_{O_2} and X_{CO_2}, it is first necessary to calculate the value of

$$\gamma = \frac{K_{CO_2} \cdot k_{CO_2}}{K_{O_2} \cdot k_{O_2}} \cdot \frac{HK_{O_2} - hk_{O_2}}{hk_{CO_2} - HK_{CO_2}},$$

where K_{O_2}, K_{CO_2}, k_{O_2}, and k_{CO_2} denote the chamber constants for chambers containing large and small fluid volumes, respectively.

Having obtained γ, the quantities of oxygen consumption and carbon dioxide produced are—

For Chamber I:

$$X_{O_2} = h \frac{k_{CO_2} \cdot k_{O_2}}{k_{CO_2} + \gamma k_{O_2}}$$

$$X_{CO_2} = h \frac{k_{CO_2} \cdot k_{O_2}}{\frac{k_{CO_2}}{\gamma} + k_{O_2}}$$

For Chamber II:

$$X_{O_2} = H \frac{K_{CO_2} \cdot K_{O_2}}{K_{CO_2} + \gamma K_{O_2}}$$

$$X_{CO_2} = H \frac{K_{CO_2} \cdot K_{O_2}}{\frac{K_{CO_2}}{\gamma} + K_{O_2}}$$

Whence the oxygen consumption and carbon-dioxide production for each chamber in terms of milligram weight and time in hours are—

$$Q_{O_2} = \frac{X_{O_2}}{m \cdot t},$$

$$Q_{CO_2} = \frac{X_{CO_2}}{m \cdot t}.$$

IV. The quantity of carbon dioxide produced for any given scale reading, h, per hour, under anaërobic conditions, is

$$X^{N_2}_{CO_2} = h \cdot k_{CO_2}.$$

II. BASIC ENVIRONMENTAL FACTORS AND OXYGEN CONSUMPTION OF PLANARIA SP.

The experiments recorded below have a twofold object. The first is the relation of oxygen consumption to the several factors or combination of factors under which all subsequent experiments are carried out. The second point is that of the definition of the simplest possible experimental conditions for the several experimental procedures of this and succeeding papers.

The material used in all experiments is a species of *Planaria* closely resembling *Planaria agilis* and *P. dorotocephala*. The species has not yet been identified. All material has been obtained from a small spring in the Santa Rita Mountains some 45 miles south of Tucson. The same species is found in other springs of the region at high altitudes (*ca.* 7,000 feet). Maximum temperature of the water in the immediate region of the spring, where the material is always most abundant, is around 12° C.

Worms are collected with beef liver according to the usual procedure used by Child and his students. They are brought to the laboratory in thermos jars and placed immediately in artificial solution at about 12° C. During the 2 days following, the temperature of the solution is gradually increased to that of the constant-temperature bath. The worms are then transferred to the aërated steam-table insets. A few days later feeding is begun on beef liver. I have also used yolk of hen's egg, but no material thus fed is used in the experiments recorded below.

1. *The experimental medium.*—The chemical constitution of the experimental medium is of importance in the present investigations apart from the question of the mechanism by which *Planaria* and similar fresh-water forms are able to maintain the salt or ion concentrations of their tissues in the presence of extremely dilute solutions. In the first place a medium of known and constant concentration is essential to the accurate interpretation of results involving the increase or the decrease of ionic concentrations of the experimental solutions. Secondly, the control of hydrogen-ion concentration in certain procedures (as, for example, in the Warburg method) is more certain in controlled basic solutions. Thirdly, many waters contain a relatively high concentration of apparently non-essential

salts. This is true in the case of Desert Laboratory water, which contains a relatively high concentration of sulphates and bicarbonate. Finally, the different procedures adopted for various purposes in subsequent work require definite changes of "basic" constituents for specific purposes. This cannot be done accurately in well waters.

In Table I the concentrations of the more important ions found in well water (Desert Laboratory) are compared with the concentrations of the same ions in waters from two sources of the *Planaria* used in this work. *Planaria* is found in excellent condition and great abundance in the waters of "Spring 2"; it may be assumed that this water contains the essential ions in physiologically favorable concentrations. Waters from both Spring 1 and Spring 2 show a much lower total salt concentration than does Desert Laboratory water, although no difficulty has been experienced in keeping stocks indefinitely in this water, either boiled or unboiled.

TABLE I

THE SALT AND ION CONCENTRATIONS OF DESERT LABORATORY WELL WATER AND WATER FROM TWO SOURCES OF *Planaria* SP.

(In parts per million)

ANALYSIS FOR	LABORATORY WATER		SPRING 1	SPRING 2
	Unboiled	Boiled		
Na	167	138	42	11
K	8	7	2	1
Ca	67	30	15	15
Mg	15	15	7	2
HCO_3	393	212	168	63
Cl	46	46	6	6
CO_3	12	12	2	.....
Sulphates	190	180	.....	.....
Nitrates	.....	.....	.....	.....

In Table II the ratios of the essential cations and anions in the three waters are compared directly. The waters show certain common characteristics. Firstly, the Ca:K ratio is high in comparison with the ratio found in the media which are used with favorable results in the maintenance of approximately normal conditions for either vertebrate or invertebrate tissues. Secondly, the amount of the HCO_3 ion is high in proportion to Cl.

If the concentrations of NaCl, KCl, and $CaCl_2$ be calculated on

the basis of the amounts of Na, K, and Ca found in Spring 2, the following approximations are found:

NaCl	0.6055 per cent
KCl	0.0002 per cent
$CaCl_2$	0.0045 per cent

These ratios of the essential salts ignore the relatively low Cl concentration of the water on which the results are based. The combination $NaHCO_3$ rather than NaCl would better approximate the concentrations of salts of the spring waters. The hydrogen-ion concentration of the spring water, however, is close to pH 7.0 at 10° C. The low pH is undoubtedly due to CO_2 present in the water. If the

TABLE II

THE RELATIVE CONCENTRATIONS OF BASIC IONS IN DESERT LABORATORY WATER (NOT BOILED) AND SPRINGS 1 AND 2. $K=1$

Ion	Laboratory Water	Spring 1	Spring 2
Na	21	21	11
K	1	1	1
Ca	8	8	15

hydrogen-ion concentration of the normal habitat is to be maintained, the foregoing solution is more nearly similar to those conditions than is the water made up of $NaHCO_3$ base under laboratory conditions, i.e., practically free of CO_2.

There appears to be no objection to the use of solutions of relatively high pH for many purposes. Where this is possible, a solution in which NaCl is replaced with $NaHCO_3$ at 0.001 M. has been used. The pH of the solution is *ca.* 8.4 after aëration with air.

In Table III, section 1, are given the concentrations of salts finally adopted as standard in the artificial media used for the measurement of oxygen consumption in the absence of free CO_2. The subscript, e.g., B_{NaCl} or B_{NaHCO_3}, signifies that the base is NaCl or $NaHCO_3$.

In the measurement of respiration and glycolysis according to the Warburg procedure, it is necessary to maintain a relatively high concentration of $NaHCO_3$ in the experimental media. The pH of the

solution is balanced with free CO_2 in the manner already described. I have used in these solutions the amounts of calcium and potassium given for the solutions B_{NaCl} and B_{NaHCO_3}. The $NaHCO_3$ concentration alone is raised; pH is maintained at approximately the value of solution B_{NaCl}.

Planaria live equally well, apparently, in each of the three solutions of Table III. In order to observe roughly the effects of high

TABLE III

SALT AND ION CONCENTRATIONS FOR BASIC SOLUTIONS FOR *Planaria* SP.
(Artificial media)

1. For the measurement of oxygen consumption in the absence of carbon dioxide. (CO_2 absorbed in manometer chambers.)

Solution: B_{NaCl}	$CaCl_2$	0.0050%
	KCl	0.0002%
	NaCl	0.0050%

The pH adjusted to 7.5 with $NaHCO_3$, in the absence of CO_2.

Solution: B_{NaHCO_3}	$CaCl_2$	0.0050%
	KCl	0.0002%
	$NaHCO_3$	0.001 M.

The pH of this solution in the absence of CO_2 is 8.4.

2. For oxygen consumption and carbon-dioxide production in the presence of free CO_2. (Warburg procedure.)

Solution: $B^{CO_2}_{NaHCO_3}$	$CaCl_2$	0.0050%
	KCl	0.0002%
	$NaHCO_3$	0.01 M.

The pH, by Hasselbalch, 7.46, for a CO_2 tension of 3 vol. per cent.

concentrations, a series of solutions was prepared with $NaHCO_3$ concentration raised at constant pH. No visible disintegrative effects were observed at the maximum concentration of $NaHCO_3$ used, 0.04 M.

Similarly, a series of solutions at constant pH, $NaHCO_3$, and Ca:K ratio but varying concentrations in the total amount of these two latter salts did not injure *Planaria* in amounts from one-tenth to fifty times the basic concentrations.

The Ca:K ratio should be mentioned before taking up the oxygen-consumption experiments. Murray (1927, 1928) has found the Ca:K

ratio most favorable for planarian explants to be relatively high. She gives the minimal ratio at about 2 by weight. She notes further that the amount of calcium salt may be as much as fifty times the amount of potassium salt without unfavorable results. The high Ca:K ratios observed in spring waters are in line with her experimental findings with *Planaria dorotocephala*. Although the species found in these waters is not *P. dorotocephala*, the suggestion of Child that the distribution of these forms, or, more specifically, their occurrence in certain springs, may in some way be connected with the relatively high Ca:K ratio is of some interest.

TABLE IV

OXYGEN CONSUMPTION OF *Planaria* SP. IN VARIOUS BASIC SOLUTIONS

SERIES	SOLUTION	pH	No. 1		No. 2	
			Millimeters per Hour	Percentage, ±	Millimeters per Hour	Percentage, ±
VI	$B_{NaCl} \times 1$	7.5	−116.6	.....	.....	.....
	$B_{NaCl} \times 5$	7.5	−116.5	0	−112.2	.....
	$B_{NaCl} \times \frac{1}{5}$	7.5	−116.4	0	.....	.....
	$B_{NaHCO_3} \times 1$	8.4	−117.8	+1	−112.9	*ca.*+1
	Lab. H_2O	8.4	.....	.....	−112.2	0
IV	Lab. H_2O	8.4	− 49.5	.....	− 46.8	.....
	B_{NaHCO_3}	8.4	− 50.1	+1	− 46.9	.....
	B_{NaCl}	7.5	− 45.9	−9	− 45.2	−3.4

A large number of experiments on the oxygen consumption of *Planaria* sp. in various basic solutions have been made. Most of these experiments were incidental to testing various forms of chambers. In general the concentration of the essential salts has little or no effect on the rate of oxygen consumption within the narrow range of concentrations of interest in the present connection. A typical set of data is given in Table IV. In all B_{NaCl} solutions the pH was maintained at 7.5 by addition of $NaHCO_3$ after preparation of the indicated solution. In the B_{NaHCO_3} solutions the Ca:K ratio was maintained constant, total amounts being varied as indicated.

One effect appears in the data that will be considered in further detail later. That is, in transferring *Planaria* from solution B_{NaCl} to B_{NaHCO_3} no primary effect, or only a very small increase in the rate of oxygen consumption, is found. On the other hand, if the change is

made from solution B_{NaHCO_3} to B_{NaCl}, a definite drop in the rate of oxygen consumption is observed. The first change brings about an increase in the rate of oxygen consumption of around 1 per cent, an amount considerably below what should be expected on the basis of change in pH from 7.5 to *ca.* 8.4. The opposite change brings about a decrease of around 7–9 per cent; the results in the table giving a good idea of the variability of the decrement.

From further experiments on the effect of $NaHCO_3$ on oxygen consumption it became clear that increasing the concentration of $NaHCO_3$ is accompanied by an initial fall in the rate of oxygen consumption. The opposite change brings about no such well-defined initial effect. The peculiarity in the results given in Table IV appears typical. After some hours the acceleration of oxygen consumption in the B_{NaHCO_3} solutions becomes much more marked. These results will be considered under the experiments on effect of $NaHCO_3$ on oxygen consumption.

TABLE V

THE ACTION OF $NaHCO_3$ ON THE OXYGEN CONSUMPTION OF *Planaria* SP.

(Millimeter scale change per 20 minutes preceding the time indicated)

TIME IN MINUTES	$NaHCO_3$ CONC. (ADDED)			
	0	B_{NaHCO_3}=0.002 M.	0.01 M.	0.055 M.
20	−28.3	−17.9	−16.6	− 8.8
40	−30.2	−16.2	−21.1	−17.3
60	.....	−23.0	−20.3	−22.9
80	.....	−22.1	.....	−31.5
100	.....	.....	.....	−30.0
Per 20	−29.3	−19.8	.....	.....

The $NaHCO_3$ concentration.—Since the Warburg method for the determination of oxygen consumption and carbon-dioxide production requires a relatively high concentration of $NaHCO_3$ in the experimental medium, it seemed of interest to measure the action of this substance on oxygen consumption in the absence of free CO_2. The experiments recorded above raise further questions of interest.

In Table V are given typical data. The indicated $NaHCO_3$ concentrations are prepared in B_{NaHCO_3} solutions, thus eliminating changes in pH with increasing $NaHCO_3$ concentrations. Results are

recorded in millimeter scale change per 20-minute interval. The scale change in the basic solution per 20 minutes is *ca.* 20 mm.; this figure is the approximate "base" with which concentration effects are to be compared.

At $NaHCO_3 = 0.001$ M., the rate of oxygen consumption is depressed at the time the first manometric determination is made (20 minutes following change of solution). The depression becomes less with time, though slowly. In $NaHCO_3 = 0.01$ a further initial depression in the rate of O_2 consumption is observed. In $NaHCO_3 = 0.055$ M., the decrease in the rate of oxygen consumption becomes much more marked; also the rise toward the rate of oxygen consumption found in B_{NaHCO_3} is relatively much more rapid than in the two lower concentrations of bicarbonate.

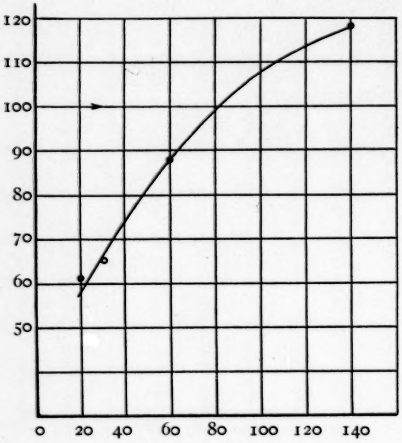

FIG. 11.—The effect of $NaHCO_3$ 0.01 M. on the oxygen consumption of *Planaria* sp. Abscissa: time in minutes. Ordinate: relative rate of oxygen consumption, the rate at 24 hours taken as 100 per cent.

The initially depressing action of $NaHCO_3$ on the rate of oxygen consumption is brought out more clearly in Table VI and Figure 11. In this case the *Planaria* are transferred from B_{NaCl} to B_{NaHCO_3} containing $NaHCO_3$ at 0.01 M. Results are calculated on the basis of the rate of oxygen consumption measured 24 hours following treatment with $NaHCO_3$. The first reading is made 20 minutes after the worms are immersed in the $NaHCO_3$ solution.

The graphed results indicate that by the end of *ca.* 2 hours the oxygen consumption is somewhat greater than it is 24 hours later. By this time, however, the rate of oxygen consumption is practically constant.

If the *Planaria* which have remained in the 0.01 M. $NaHCO_3$ solution are returned to B_{NaCl}, pH = 7.6, a slight drop in the rate of

oxygen consumption occurs. The manometer readings following such a change are appended to Table VI. The results are of the same order as those already noted as typical of the experiments made with the basic solutions.

3. *The hydrogen-ion concentration.*—This will not be considered experimentally here since it will be taken up later in connection with

TABLE VI

THE TIME EFFECT OF $NaHCO_3$ 0.01 M. ON THE OXYGEN CONSUMPTION OF *Planaria* SP.

Time in Minutes	Millimeter Scale/Hour	Percentage Rate at 24 Hours
20	− 76.5	61.2
30	− 82.0	65.6
60	−110.0	88.0
140	−148.0	118.4

Time in Minutes after 24 Hours	Millimeter Scale/20 Minutes	Percentage Rate at 24 Hours
−20	− 40.8	.....
20–40	− 42.4	.....
40–60	− 41.3	.....
60	−124.7 per hour	100

Time in Minutes in $NaHCO_3$-free Solution	Millimeter Scale/20 Minutes	Percentage Rate at 24 Hours
20	− 36.7	
20	− 38.4	
20	− 39.6	

the $NaHCO_3$–CO_2 system. All experiments recorded in this paper have been controlled with respect to pH in accordance with the data of Table III.

4. *The oxygen tension.*—Lund (1921) has measured the oxygen consumption of *Planaria agilis* in relation to oxygen tension and finds that at tensions above *ca.* one-third saturation with air (i.e., at oxygen tension *ca.* 7 vol. per cent) the worms consume oxygen at a constant rate. More recently Hyman has studied the effect of oxygen tension on the oxygen consumption of *P. dorotocephala* with results of the same order as Lund's.

In Table VII are given a set of typical manometer readings on the rate of oxygen consumption of large worms in relation to oxygen tension; the results are plotted in Figure 12. In the plotted results the rates of oxygen consumption at 9, 10.8, and 14.5 vol. per cent fall on a practically straight line. The rate of oxygen consumption at atmospheric oxygen tension is *ca.* 2 per cent lower than is the rate at 14.5 vol. per cent. In general, however, the evidence of the relation between oxygen tension and oxygen consumption at tensions less than atmospheric points to a definite limiting tension in the neighborhood of 14–15 vol. per cent.

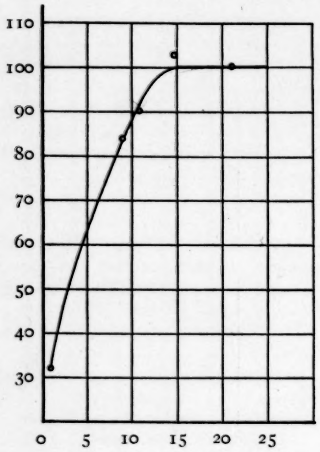

FIG. 12.—The oxygen consumption of *Planaria* sp. at various oxygen tensions. Abscissa: oxygen tension in volume per cent. Ordinate: percentage of oxygen consumption at tensions indicated, the rate in atmospheric oxygen being taken as 100 per cent.

The limiting tension of *ca.* 15 vol. per cent is *ca.* twice that found by Lund for *Planaria agilis*. The experiments were carefully checked, and in one series oxygen at 13.4 vol. per cent was allowed to bubble through the solution and gas chamber for 15 minutes before making manometric determinations. The rate of oxygen consumption at 13.4 vol. per cent was found to be only 81 per cent of the rate of oxygen consumption of the same lot of worms when placed in an atmosphere of air.

Several series of experiments were run at oxygen tensions greater than atmospheric. In Table VIII the extreme effect in the rate of oxygen consumption observed at high tensions is given under the heading of "Experiment 9." A similar small decrease in the rate of oxygen consumption of *Planaria* sp. has been observed in all cases thus far tested at high oxygen tensions. In general the decrease is only about 2 to 3 per cent as compared with the rate of oxygen consumption in air. The depression is too small to be considered important at this time; it will be further investigated using long-time tests at high oxygen tensions.

The question of a possible limiting action of oxygen tension at atmospheric tension on the respiration of sections has also been considered. The operation of some such factor might easily account for

TABLE VII

THE EFFECT OF OXYGEN TENSIONS BELOW ATMOSPHERIC TENSIONS ON THE OXYGEN CONSUMPTION OF *Planaria* SP.

Planaria: 15 worms, 25 mm. in length.
Oxygen tensions by the Orsat method.
Solution: B_{NaCl}.

O_2 Tension	Millimeter Scale Change per Hour	Percentage of Rate of O_2 Consumption in Air
9 vol. per cent.....	−66.9	84
10.8 vol. per cent.....	−71.5	90
14.5 vol. per cent.....	−82.0	102.5
21.9 vol. per cent.....	−79.9	100
0.9 vol. per cent.....	.....	30, 34

the differential rate of respiration of sections if it could be shown to exist. No evidence for the limiting action of oxygen tension at atmospheric concentration could be found.

TABLE VIII

THE EFFECT OF OXYGEN TENSIONS ABOVE ATMOSPHERIC TENSIONS ON THE RATE OF OXYGEN CONSUMPTION OF *Planaria* SP.

Planaria: 15 worms, 25 mm. in length.
Oxygen tensions by Orsat method.
Solution: B_{NaCl}.

O_2 Tensions	Millimeter Scale Change per Hour		Percentage of Rate of O_2 Consumption in Air	
	No. 7	No. 9	No. 7	No. 9
20.9 vol. per cent.....	−86.4	−100.3	100.0	100.0
57.5 vol. per cent.....	−83.7	.....	98.2	.....
97.2 vol. per cent.....	−84.8	− 98.4	98.0	98.0
97.2 vol. per cent.....	.....	− 96.4	.....	96.4

Twenty large worms were sectioned to give three sections each $2\frac{1}{3}$ mm. in length from head posteriorly. Sections were placed together in a single chamber. Since the respiration of *Planaria* is at a maximum immediately following section, any depression in the rate of respiration due to the limiting action of oxygen tension should

be most marked at that time. The rate of oxygen consumption is averaged below for two series in air and in $O_2 = 97$ vol. per cent for several alternate determinations on each of two series.

Test	In Air; $O_2 = 20.9$ Vol. Per Cent	In $O_2 = 97$ Vol. Per Cent
1	1.00	0.984
2	1.00	0.984

The slight drop in the rate of respiration observed in the pure oxygen has been noted also in the tests on whole worms at high oxygen tensions. Analysis of the oxygen used showed no trace of either CO or CO_2. The drop is so small that it is impossible to decide at this time whether, indeed, any significance is to be attached to it.

III. DISCUSSION

In approaching the problem of energy exchange in lower forms from the standpoint of quantitative data rather than from that of comparative data, a few necessary conditions must be imposed. The first is that of accuracy of method. In the description of the methods which I have used, this has been a primary consideration. So far the methods and procedures seem adequate from this standpoint.

The control and definition of experimental conditions is the second requirement for quantitative analysis. In the present paper these are given for all experiments measuring oxygen consumption only. The experiments reported here show that the basic solutions used are favorable to the maintenance of constant metabolic rates in *Planaria* sp., that increase in the concentration of $NaHCO_3$ brings about an initial decrease in the rate of oxygen consumption of considerable magnitude, and that below a limiting oxygen tension of *ca.* 15 vol. per cent the rate of oxygen consumption is decreased with decreasing oxygen tension. In all oxygen-consumption experiments in the absence of carbon dioxide, then, the exact definition of experimental conditions is given when solutions B_{NaCl} of B_{NaHCO_3} are used in an atmosphere of air.

I have already noted the relation of the Ca:K ratio of the experimental media which are given here (Table III) to the experimental

results of Murray. The high degree of tolerance of planarian tissues for calcium has been discussed in her paper.

The results recorded here on the relation of oxygen tension to oxygen consumption show that the limiting tension for the species here used is *ca.* 15 vol. per cent. This value is much higher than that given by Lund (1921) as the limiting tension of *Planaria agilis*. The relation of oxygen tensions below the limiting factor is to be found in terms of thickness of tissue, rate of oxygen consumption, and rate of diffusion of oxygen. It should be of interest to investigate the matter further, using both material of different species and material of different physiological condition but of the same species. The first aspect of such an investigation should be that of the limiting tension in relation to physiological age.

IV. SUMMARY

1. The manometric method of Warburg has been modified for the measurement of respiratory and glycolytic metabolism in *Planaria*. Improvements embodied in the modified apparatus are: The entire gas volume of the instruments is within the constant-temperature bath. An interchangeable type of chamber is used; it is particularly adapted to the handling of *Planaria* over long periods of time. Sloping gauges are used. A method for the control of barometric fluctuations is described.

2. Apparatus is described for the maintenance of constant experimental conditions throughout all phases of the work.

3. Experimental solutions based on the salt concentrations of spring waters are given for *Planaria*. The Ca:K ratio is found to be relatively high. Within the limits noted changed calcium and potassium concentrations at constant ratio are without effect on the rate of oxygen consumption of *Planaria* sp.

4. $NaHCO_3$ exerts a marked initial depression on rate of oxygen consumption. The effect is of short duration (*ca.* 2 hours for 0.01 M. $NaHCO_3$). The depression is followed by a slight increase in rate of oxygen consumption. It is clear that in experimental procedures requiring relatively high bicarbonate concentrations a period of acclimation must be allowed for.

5. Oxygen tension limits the rate of oxygen consumption of large

Planaria sp. below *ca.* 14–15 vol. per cent. A slight drop in rate of oxygen consumption occurs at high tensions: further work will be necessary to indicate the possible significance of the slight decrease in rate of oxygen consumption noted. The rate of oxygen consumption is relatively high in very low oxygen tensions.

LITERATURE CITED

HASSELBALCH, K. A. 1917. Die Berechnung der Wasserstoffzahl des Blutes aus der freien und gebundenen Kohlensäure desselben, und die Sauerstoffbindung des Blutes als Funktion der Wasserstoffzahl. Biochem. Ztschr., LXXVIII, 112.

LUND, E. J. 1921. Oxygen concentration as a limiting factor in the respiratory metabolism of *Planaria agilis*. Biol. Bull., XLI, 203.

MURRAY, M. R. 1927. The cultivation of planarian tissues *in vitro*. Jour. Exp. Zoöl., XLVII, 467.

———. 1928. The calcium-potassium ratio in culture media for *Planaria dorotocephala*. Physiol. Zoöl., I, 137.

RICHARDS, HENRY B. 1929. The respiratory quotient. Physiol. Rev., IX, 61.

WARBURG, O. 1923. Versuche an überlebendem Carcinomgewebe. (Methoden.) Biochem. Ztschr., CXLII, 317.

———. 1924. Verbesserte Methode zur Messung der Atmung und Glykolyse. *Ibid.*, CLII, 51.

OXYGEN CONSUMPTION IN THE DEVELOPMENTAL STAGES OF A CLADOCERAN

VASIL OBRESHKOVE

St. Stephen's College, Columbia University, and
The Zoölogical Laboratory, Syracuse University

INTRODUCTION

THE present study is based on *Simocephalus exspinosus*, one of the many *Cladocera* reared in the laboratory of Dr. A. M. Banta. The animals subjected to experimentation represent his line 740—a line started from a single individual August 11, 1912. The individuals were allowed to reproduce parthenogenetically for a period of approximately 17 years from the time of the starting of the line to the time the present study was made. The study was undertaken to determine the rate of oxygen consumption of females at various stages in their development and to determine if there exists any correlation between the progressive development of the individuals and their rate of oxygen consumption, size considered. A few individuals were sent to me from the Carnegie Station for Experimental Evolution, Cold Spring Harbor, from which the material for the present study was obtained.

Simocephalus exspinosus constitutes a very desirable form for work of this type. This species is easily reared in the laboratory, its genetic cycle is short, and it can be kept under very close laboratory control. This enables one to make a more critical study of the life-cycle of the individuals and their cultural behavior. The individuals are transparent under the microscope, and one can easily observe the ovarian development, count the number of eggs in the brood pouch, and observe their development. A knowledge of these factors is of importance for experimental work of this type.

APPARATUS AND METHODS

The animals were reared on a culture medium already described by Banta (1921*a*, 1921*b*). Newly released young were transferred to wide-mouth, clear bottles about 200 cc. in capacity and containing about 100 cc. of the culture medium. In each bottle was placed a single individual; and when young appeared, they were transferred

to similar series of bottles. This procedure insured material genotypically identical. The animals were reared in a basement room employed for aquaria, the temperature of which remained fairly constant around 22° C.

The apparatus employed for the determination of oxygen consumption was Thunberg's microrespirometer, and with some slight modification it was the same as employed by Fenn in his more recent work on the measurement of the gas exchange of nerve. The apparatus and procedure for the measurement of oxygen consumption of *Cladocera* have already been described by Obreshkove and Banta (1930). It suffices to say here that it consisted of two bottles connected by a horizontal capillary index tube. The capillary carried a kerosene drop 2 mm. long, the shift of position of which recorded the reduction in oxygen pressure in the bottles. The bottles were 9 cc. in capacity, the left bottle being larger by 0.08 cc. The index capillary in this apparatus held 0.0019142 cc. per cm. Another equally sensitive apparatus occasionally employed in these series of experiments consisted of bottles of 11-cc. capacity with index capillary holding 0.0020538 cc. per cm. The capillary index tubes were directly graduated in millimeters, with fine dividing lines extending around the tube. In reading the position of the kerosene drop, corresponding points nearest the drop were kept in line. With this arrangement no difficulty was experienced in avoiding parallax, and the position of the drop was easily read to 0.1 mm.

This apparatus proved extremely sensitive in measuring the minute quantities of oxygen consumed by the animals. Repeated tests at regular intervals with the animals in the respiratory chamber showed uniform rate of oxygen consumption; and when, on several occasions, the same group of animals after a period of rest were subjected to experimentation for a second time, they gave the same results. It is, therefore, thought that the experimental conditions were well controlled and that the method can be satisfactorily employed for the measurement of oxygen consumption of these very minute organisms at progressive stages in their development.

OBSERVATIONS

Rate of respiration of first instar young.—Simocephalus exspinosus young at the time of their release from the brood pouch of the

mother, that is, when in their first instar, have an average body length of 0.63 mm. No other appreciable change in the length of the individual is observed till ecdysis, which occurs some 48 hours later, depending on the temperature and food conditions. The individuals at this stage were subjected to experimentation soon after their release. When in the culture bottles, they showed active swimming movements. When in the respirometer, however, on account of the small size of the container in which they were placed, the individuals at this and at other stages studied, remained quiet for a longer period of time and only occasionally came to the surface.

Because of the extremely small size of the individuals at this stage, it was thought advisable to test them in groups. Groups of ten were chosen, and only occasionally were a larger number employed to test the sensitivity of the apparatus. The apparatus proved equally sensitive and accurate in recording the reduction of oxygen pressure in the respirometer when a smaller group at this stage was employed, but in such cases a longer period was required for the animals to be kept under observations.

In brief, the experimental procedure was as follows: With the animals in the respirometer, the cocks were turned so that both bottles were made to communicate with the outside and only one end of the capillary remained closed to hold the kerosene drop in place. Then the apparatus was inserted in a Freas water bath, the temperature of which was set for 25° C., constant to ±0.01° C. One hour was found necessary for the respirometer to come to equilibrium in the water bath. The stopcocks were then turned so that both bottles communicated only with the capillary index tube. Usually an additional 15 minutes was allowed before the initial position of the kerosene drop was recorded, thus insuring no disturbance of the kerosene drop from the turning of the stopcocks. After this the position of the drop was read at 15-minute intervals and usually for a period of 1 hour. Occasionally, however, the individuals were subjected to experimentation for several hours; no change was observed in the uniform rate of movement of the drop.

In Table I are given the results obtained with the first instar young. The table is valuable as an illustration of the range of results obtained with individuals which show very little variation in body size. An inspection of the table will reveal that the oxygen con-

sumed per individual per minute is fairly constant, the average for the entire series of experiments being 5.6×10^{-7} cc. per minute per individual. The table likewise gives the cubes of the body lengths of the individuals tested. This information will be utilized later in this discussion for a more critical analysis of a comparative study of the rate of oxygen consumption per unit of protoplasm.

Rate of respiration of third instar young.—In measuring the rate of oxygen consumption of third instar young, the individuals were subjected to experimentation late in this stage. In this species the animals at this stage are approximately 3 days old. When the individuals shed their carapace in entering a new instar, there is a sud-

TABLE I

OXYGEN CONSUMPTION OF *Simocephalus exspinosus* FEMALES, FIRST-INSTAR YOUNG, IMMEDIATELY AFTER RELEASE

No. of Individuals in Chamber	Average Body Length in Millimeters	Cube of Body Length	Oxygen Consumption Cc. $\times 10^{-7}$ per Group Tested per Hour	Oxygen Consumption Cc. $\times 10^{-7}$ per Individual per Minute
20	0.64	0.26	6994.8	5.8
10	0.64	0.26	3291.7	5.5
10	0.62	0.24	3286.0	5.5
10	0.62	0.24	3286.0	5.5
10	0.62	0.24	3286.0	5.5
10	0.62	0.24	3696.8	6.1
Average	0.63	0.25	.....	5.6

den and very appreciable change in their length. From the nature of the process, however, it is easy to see that the mass of the individuals at the time of shedding remains the same as just previous to this and that there is only an increase in volume. This increase in volume may in part be due to the freeing of the living matter from its previous crowded state under the old carapace and also perhaps due to the absorption of a certain amount of water. Hence it was thought that the late instar is more likely to give us a true expression of the nature of the protoplasm, characteristic for that instar. This assumption found experimental support.

In measuring the rate of respiration of young in their late third instar, on several occasions some of the individuals of the group under observation shed their carapaces in the respirometer. This in some cases constituted the majority of the individuals in the chamber; and yet the rate of metabolism of the animals remained the same,

as judged by the continuation of a uniform rate in the movement of the kerosene drop as observed at regular intervals. Of course in each case it was difficult to determine with certainty the exact time when the shedding of the carapace took place in the respirometer, and hence this point may need further investigation.

Nine determinations were made with young in their late third instar. The animals were tested in groups of six. The details of these experiments are given in Table II. The average body length of the individuals was found to be 1.17 mm. Thus the third instar

TABLE II

OXYGEN CONSUMPTION OF *Simocephalus exspinosus* FEMALES, THIRD-INSTAR YOUNG

No. of Individuals in Chamber	Age in Days	Average Body Length in Millimeters	Cube of Body Length	Oxygen Consumption Cc. $\times 10^{-7}$ per Group Tested per Hour	Oxygen Consumption Cc. $\times 10^{-7}$ per Individual per Minute
6.....	3	1.28	2.09	15198.1	42.2
6.....	3	1.19	1.68	11090.5	30.8
6.....	3	1.15	1.52	12322.8	34.2
6.....	3	1.18	1.64	17662.7	49.0
6.....	3	1.15	1.52	11912.0	33.0
6.....	3	1.15	1.52	9036.7	25.1
6.....	3	1.13	1.44	13399.6	37.2
6.....	3	1.16	1.56	9447.5	26.2
6.....	3	1.12	1.40	12322.8	34.2
Average....	.....	1.17	1.60	.....	34.7

young showed an average increase of 0.54 mm. in length over the previous stage studied, which averaged 0.63 mm. The rate of oxygen consumption of third instar young is shown to be increased, the average per individual per minute being 34.7×10^{-7} cc. as compared with 5.6×10^{-7} cc. for the previous stage.

Oxygen consumption of first-brood mothers.—*Simocephalus exspinosus*, at the time when they release their first clutch of young, have an average body length of 2.18 mm. In this species the deposition of new eggs in the brood pouch occurs at once after the release of young, and these develop rapidly. Subsequent young are released, on the average, one clutch every other day till senescence is reached, after which there is a greater interval between successive clutches. Hence, a delay in subjecting individuals to experimentation immediately after the release of young is likely to lead to discrepancy in observations, in that the oxygen consumed cannot be ascribed

to the mother alone; a fair amount of it will represent that utilized by the growing embryos in the brood pouch.

In this and subsequent stages studied, the ovary of each mother was examined under the microscope, the number of eggs and their stage of development being recorded. Only those individuals were chosen which showed eggs in early segmentation and whose number fell in line with the average for the group studied, which was 12 eggs for this stage. The number of clutches of young a mother had

TABLE III

OXYGEN CONSUMPTION OF *Simocephalus exspinosus* FEMALES AT SEXUAL MATURITY

No. of Individuals in Chamber	Age in Days	Average Length in Millimeters	Cube of Body Length	Oxygen Consumption Cc. $\times 10^{-7}$ per Group Tested per Hour	Oxygen Consumption Cc. $\times 10^{-7}$ per Individual per Minute
4	7	2.08	9.00	28753.2	119.8
4	6	2.04	8.49	25056.4	104.0
4	6	2.04	8.49	24645.6	102.7
2	6	2.09	9.13	11485.4	95.7
4	6	2.14	9.80	23824.0	99.3
4	7	2.20	10.65	25877.9	107.8
4	6	2.38	13.48	31271.0	130.0
4	6	2.39	13.65	31682.0	132.0
4	7	2.14	9.80	32917.0	137.0
4	7	2.20	10.65	38266.0	159.0
4	7	2.30	12.17	33328.0	139.0
4	7	2.20	10.65	28391.0	118.0
4	7	2.30	12.17	34974.0	146.0
4	6	2.04	8.49	25099.0	105.0
4	7	2.08	9.00	30860.0	129.0
Average	.....	2.18	10.37	.....	121.6

produced proved to be a more true criterion in judging the physiological age of the individuals than a consideration of their ages in terms of time. For it is evident that the individuals may be of the same size and even may have been released at the same time, and yet due to extrinsic and intrinsic factors they may not be in the same stage of development.

An inspection of Table III will reveal that the time required for *Simocephalus exspinosus* to reach sexual maturity and release their first clutch of young, ranges from 6 to 7 days for a temperature around 22° C. Likewise, one will observe variations in the body size of the groups of animals studied. Figures on the rate of oxygen consumption in this table are of value in that they illustrate the

range of results obtained with individuals of varying size. The actual deviations in the various readings are due to size differences and only in part to individual differences. This becomes more clear when a correlation is made between the size and the rate of oxygen consumption in animals which are in the same stage of development.

The last seven readings in Table III are those obtained at a previous summer in connection with another problem. The individuals in the latter group are shown, on the average, to be slightly larger than the first group studied. They were included in order to obtain a greater range of body sizes, and only after the conviction that the two sets of readings are comparable. The oxygen consump-

TABLE IV

OXYGEN CONSUMPTION OF *Simocephalus exspinosus* THIRD-BROOD MOTHERS

No. of Individuals in Chamber	Age in Days	Average Length in Millimeters	Cube of Body Length	Oxygen Consumption Cc.$\times 10^{-7}$ per Group Tested per Hour	Oxygen Consumption Cc.$\times 10^{-7}$ per Individual per Minute
4.....	11	2.50	15.62	45183.6	188.3
2.....	10	2.40	13.82	18073.4	150.6
3.....	12	2.26	11.54	21770.3	121.0
4.....	11	2.50	15.62	44362.0	184.8
4.....	12	2.52	16.00	44772.8	186.6
Average.....		2.44	14.52	.....	166.2

tion per individual per minute for the entire group of first-brood mothers studied is shown to be 121.6×10^{-7} cc., as compared with 34.7×10^{-7} cc. for the previous stage; but the first-brood mothers are larger than the third-instar young.

Oxygen consumption of third- and fifth-brood mothers.—The age of mothers which have released three clutches of young ranges from 10 to 12 days. Five groups of mothers were studied at this stage, and the results are given in Table IV. This table shows a more pronounced correlation between size and the oxygen consumed per individual per minute. The average length of the mothers was found to be 2.44 mm. The first-brood mothers averaged 2.18 mm. in length; thus, third-brood mothers showed an average increase of 0.26 mm. in length over the previous stage studied. The third-brood mothers consumed oxygen at the rate of 166.2×10^{-7} cc. as compared with 121.6×10^{-7} cc. per individual per minute for the

first-brood mothers. On the other hand, mothers which have produced five clutches of young are approximately 2 weeks old, have an average body length of 2.77 mm., and utilize oxygen at the rate of 202.8×10^{-7} cc. per individual per minute (Table V). This represents an increase of 0.33 mm. in body length and also an increase of 36.6×10^{-7} cc. of oxygen per individual per minute over third-brood mothers.

A great deal of difficulty was experienced in rearing mothers to the seventh- and ninth-brood stage. After the sixth- and seventh-brood stage there was observed a pronounced falling-off in the vitality of the individuals, as indicated by the longer delay in the subse-

TABLE V

OXYGEN CONSUMPTION OF *Simocephalus exspinosus* FIFTH-BROOD MOTHERS

No. of Individuals in Chamber	Age in Days	Average Length in Millimeters	Cube of Body Length	Oxygen Consumption Cc. $\times 10^{-7}$ per Group Tested per Hour	Oxygen Consumption Cc. $\times 10^{-7}$ per Individual per Minute
2.....	14	3.02	27.54	32093.9	267.4
2.....	14	3.02	27.54	28390.7	236.6
2.....	15	2.54	16.39	17662.7	147.2
2.....	15	2.59	17.37	18484.2	154.0
2.....	14	2.66	18.82	25056.4	208.8
Average.		2.77	21.53	.....	202.8

quent release of young and also by the number of dead individuals recorded each day. Young are liberated with the ecdysis of the mother.

In *Simocephalus exspinosus* the shedding of the carapace is a critical process; and our daily record indicates that in older individuals it is accomplished with more difficulty, for while the young may be successfully released the mother may perish in the act. Often in a series involving twenty-five or thirty culture bottles, only one or two individuals would survive to the seventh- and ninth-brood stage, thus suggesting that the individuals were nearing a stage of senescence. This assumption finds further experimental support from the records of the rate of oxygen consumpton; this will be pointed out later. It so happened that the few individuals which survived to the ninth-brood stage showed, at the time when the experimental work was in progress, eggs too far advanced to be comparable with those produced in the previous stages studied. Hence,

as much as we would have liked to determine the rate of oxygen consumption of larger and older individuals, this was found difficult.

Oxygen consumption in the developmental stages, size considered.—The difficulty in computing the absolute weight or body surface of such small animals as *Simocephalus exspinosus* is obvious. These aquatic animals are too small to allow accurate weighing singly, or even in small groups. For computing the unequal size of the animals studied, we have utilized the rule that the volumes of two similar but irregular bodies vary as the cube of their length.

TABLE VI

SUMMARY TABLE ON THE RATE OF OXYGEN CONSUMPTION BY *Simocephalus exspinosus* FEMALES AT FIVE STAGES IN THEIR DEVELOPMENT

	First-Instar Young	Third-Instar Young	First-Brood Mothers	Third-Brood Mothers	Fifth-Brood Mothers
Average body length (mm.)	0.63	1.17	2.18	2.44	2.77
Cube of body length	0.25	1.60	10.37	14.52	21.53
Number of times the size of the first-instar young	.....	6.4	41.5	58.1	86.1
Oxygen consumption per individual per minute, Cc. $\times 10^{-7}$	5.6	34.7	121.6	166.2	202.8
Computed oxygen consumption on basis of first-instar young, size considered, Cc. $\times 10^{-7}$	5.6	36.0	233.5	327.1	484.9
Rate of oxygen consumption compared with first-instar, size considered (per cent)	100.0	96.4	52.1	50.8	41.8

Table VI gives summary figures for a comparison of the rate of oxygen consumption at five stages in the development of the animals studied. The young in their first instar are taken as the unit of protoplasm as a basis of comparison. On this basis of calculation the table reveals that, size considered, the rate of oxygen consumption is the highest in the youngest animals and decreases with advancing age. If the rate of oxygen consumption in the first-instar young immediately after their release be represented by 100 per cent, then in the third-instar young the rate becomes 96.4 per cent; and in the sexually mature individuals there is a further decrease to 52.1 per cent. The decrease in the rate of oxygen consumption is shown to continue with the advancing age of the individuals, and in the fifth-brood mothers the rate becomes only 41.8 per cent. Table VI gives further data involved in the comparisons.

DISCUSSION

The rate of oxygen consumption in this animal is, of course, an index of its metabolic rate. Several investigators on both invertebrates and vertebrates have demonstrated that larger and older animals have a lower rate of metabolism per unit of body surface or protoplasm than the smaller and younger animals. This was shown in several species of *Planaria* (Hyman, 1919; Allen, 1919), where the oxygen consumption was determined. Bounhiol (1902), working on polychate annelids, and Jolyet and Regnard (1877), working with several invertebrate species, earlier arrived at the same conclusion. In vertebrates also this relationship between size and age is well known. The present study shows that these principles apply also in the case of *Cladocera*.

The metabolic rate is relatively high in the first-instar young. If this rate be represented by 100 per cent, then the rate in the rapidly growing third-instar young becomes 96.4 per cent; and in the first-brood mothers it decreases to 52.1 per cent. The rate of oxygen consumption further decreases in the older individuals. In the third-brood mothers the rate becomes 50.8 per cent, and in the fifth-brood mothers it falls to 41.8 per cent. The rate of decrease in the sexually mature individuals is actually greater than the figures indicate (Table VI). For, the amount of oxygen consumed recorded per individual per minute at these stages represents the oxygen utilized by the mothers and also by the eggs in the brood pouch. The number of eggs laid in the brood pouch gradually increases with the release of successive clutches of young. The average number of eggs for the first-brood mothers subjected to experimentation was found to be 12, that for the third-brood mothers 16, and for the fifth-brood mothers 22. In view of what has been learned of the metabolic rate of young just released, it is evident that the eggs in the brood pouch must also have a comparatively high metabolism, and hence the amount of oxygen consumed by the third-brood mothers alone must be lower than actually observed and still further lower in the case of the fifth-brood mothers.

The gradual decrease in the rate of oxygen consumption of *Simocephalus exspinosus* recorded in this paper with the advance of age clearly indicate that development in this species is accompanied

by a progressive decrease in the rate of metabolism of the individual. In fact, it appears to be a part of the process of development itself. In view of this, one is led to conclude that in still older animals than those studied, one would expect to find a further decrease in the gaseous metabolism of the individuals. This assumption finds support in the figures obtained by me in connection with another problem, that of the rate of carbon-dioxide production by ninth-brood *Simocephalus exspinosus* as compared with that of fifth-brood individuals of the same species.[1] The method employed was that involving observations of the rate of change in the hydrogen-ion concentration, the change being determined colorimetrically. To produce a change from the color characteristic for pH 7.76 to the color representing pH 7.36 required an average of 711.4 seconds for the ninth-brood mothers and 457 seconds for the fifth-brood mothers —a difference of 254.4 seconds. Size considered, the decrease in the rate of carbon-dioxide production in the case of the ninth-brood mothers as compared with fifth-brood mothers was 44.3 per cent. It should be noted that the production of ninth-brood mothers was extremely difficult: of 200 cultures which were started, only 6 pairs of individuals survived.

In most organisms an enormous increase in size occurs during the earlier part of the life-cycle. That a similar change occurs in the case of *Simocephalus exspinosus* is indicated by the limited data on the rate of growth of the individuals subjected to experimentation in this study. The percentage increment of growth determined from the absolute increments and the cube of the body lengths at the beginning of each age-interval studied, showed an increase only from the third instar to the first-brood stage, and thereafter, commencing with the first-brood mothers, a decrease. In view of this and other observations recorded here, we are justified in concluding that senescence in this species is progressive and is primarily a decrease in the rate of the dynamic processes of the individuals.

SUMMARY

1. The oxygen consumption of *Simocephalus exspinosus* in five stages of development was studied by a modified Thunberg micro-

[1] Unpublished results. For description of method see Parker, *Journal of General Physiology*, VII, 641.

respirometer. The rate of gaseous metabolism as determined by the rate of oxygen consumption was compared with the first-instar young, size considered.

2. The rate of gaseous metabolism in this species is relatively high in the first-instar young, and it decreases by only 3.6 per cent in the third-instar young.

3. As the individuals reach further steps of development, the metabolic rate further decreases, being in the case of older first-brood mothers 52.1 per cent that of the newly released young, in the third-brood mothers 50.8 per cent, and in the fifth-brood mothers 48.8 per cent.

4. The progressive decrease in the gaseous metabolism of these individuals is further illustrated by the rate of carbon-dioxide production of the ninth-brood mothers determined colorimetrically. This rate was found to be 44.3 per cent that of the fifth-brood mothers, size considered.

5. It is concluded that senescence in this species is progressive, and that it is primarily a decrease in the rate of the dynamic processes of the individuals.

6. The foregoing comparisons are based on the assumption that the volumes of two similar but irregular bodies vary as the cube of their length.

LITERATURE CITED

ALLEN, G. D. 1919. Quantitative studies in the rate of respiratory metabolism in *Planaria*. Amer. Jour. Physiol., XLIX, 420.

BANTA, A. M. 1921*a*. A convenient culture medium for Daphnids. Science, N. S., LIII, 557.

———. 1921*b*. Selection in *Cladocera* on the basis of a physiological character. Carnegie Inst. of Wash. Pub. No. 305.

BOUNHIOL, J. 1902. Recherches bibliotiques expérimentales sur la respiration des Annélides polychetes. Ann. d. Sci. Nat. Zoöl., XVI, 1.

FENN, W. O. 1927. The gas exchange of nerve during stimulation. Amer. Jour. Physiol., LXXX, 387.

HYMAN, L. H. 1919. Oxygen consumption in relation to age differences. Biol. Bull., XXXVII, 388.

JOLYET and REGNARD. 1877. Recherches physiologiques sur la respiration des animaux aquatiques. Arch. d. Physiol., IV, 44.

OBRESHKOVE, V., and BANTA, A. M. 1930. A study of the rate of oxygen consumption in different Cladocera clones derived originally from a single mother. Physiol. Zoöl., III, 1.

PARKER, G. H. 1920. The production of carbon dioxide by nerve. Jour. Gen. Physiol., VII, 641.